GENERAL STRUCTURAL NOTES

PART 1 – GENERAL REQUIREMENTS AND DESIGN CRITERIA

1.1 GENERAL
- A. Refer to project specifications for detailed requirements for material and workmanship.
- B. Unless otherwise noted, details, sections and notes contained in the structural contract documents shall be considered typical for all similar conditions even if not explicitly referenced.
- C. The contractor shall submit a single dimensioned and coordinated drawing for each level showing the locations of all sleeves and openings required by all trades prior to initiating any work.
- D. Loads imposed on the base building structure and temporary conditions intended to accommodate construction means and methods are not explicitly considered in this design. The contractor shall advise the Engineer of Record regarding construction loads and temporary conditions imposed on the building structure and shall compensate the Engineer of Record for reviewing these conditions.

1.2 ELEVATIONS & DIMENSIONS
- A. All dimensions, elevations and conditions shall be verified in the field by the contractors and any discrepancies shall be brought to the attention of the Engineer of Record for clarification before proceeding with the affected part of the work. Dimensions and elevations noted in the contract documents as (+/–) and all field conditions shall be verified in the field (V.I.F.) by the contractors prior to the submissions of shop drawings. Upon receipt of shop drawings, the engineer has the right to assume that all field dimensions, elevations and conditions have been verified by the contractors and that the shop drawings accurately reflect such verifications unless stated otherwise on the shop drawings.

1.3 BUILDING CODES AND REFERENCED STANDARDS
- A. International Building Code 2009 with Massachusetts Amendments (8th Edition)
- B. ASCE/SEI 7–05, Minimum Design Loads for Buildings and Other Structures

1.4 DESIGN LOADS
- A. Dead Loads:
  All permanent stationary construction including mechanical equipment and their weights where noted on the structural drawings.
- B. Floor Live loads (uniform/concentrated)
  Where appropriate, these loads have been reduced in accordance with Section 1607.9 of the Building Code.

| | | Uniform/Concentrated |
|---|---|---|
| 1. | Public Space | 100 psf |
| 2. | Exits (not reducible) | 100 psf |
| 3. | Roof | 30 psf |

- C. Roof Snow Load Parameters. Where appropriate, drifting snow loads have been considered in accordance with Section 1610.6 of the Building Code.

| | | |
|---|---|---|
| 1. | Ground Snow Load, $P_g$ | 55 psf |
| 2. | Flat Roof Snow Loads, $P_f$ | 46 psf |
| 3. | Sloped Roof Snow Loads, $P_s$ | 46 psf |
| 4. | Snow Exposure Factor, $C_e$ | 1.0 |
| 5. | Snow Load Importance Factor, $I_s$ | 1.0 |
| 6. | Thermal Factor, $C_t$ | 1.2 |

- D. Wind Load Parameters

| | | |
|---|---|---|
| 1. | Basic Wind Speed, V | 100 mph |
| 2. | Wind Importance Factor, $I_w$ | 1.0 |
| 3. | Wind Exposure | C |
| 4. | Internal Pressure Coefficient | ±0.18 |

  5. Design Wind Pressure: Components and Cladding for open structures or parapets as applicable. See table below for metal panel facial on existing buildings.

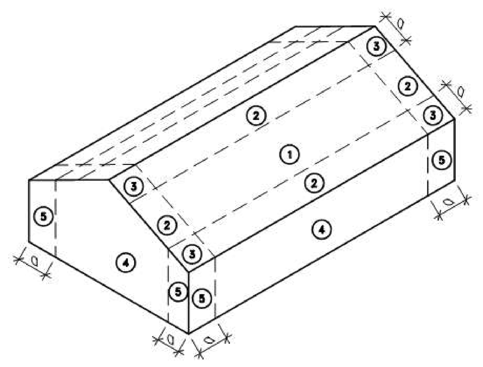


Notes:
1. The "a" distance is equal to the minimum of 10% of the least horizontal distance or 0.4*h, but not less than 3ft or 4% of the least horizontal dimension.
2. Positive indicates pressure to the building surface, negative indicates suction to the building surface.
3. h is the mean roof height.
4. Linear interpolation of table is not permitted see ASCE 7 for more information.

Component and Cladding Wind Loads (PSF)

| Area (SF) | Zone 1 Positive | Zone 1 Negative | Zone 2 Positive | Zone 2 Negative | Zone 3 Positive | Zone 3 Negative | Zone 4 Positive | Zone 4 Negative | Zone 5 Positive | Zone 5 Negative |
|---|---|---|---|---|---|---|---|---|---|---|
| ≤10 | 10 | –24 | 10 | –42 | 10 | –62 | 25 | –27 | 25 | –33 |
| ≥100 | 10 | –17 | 10 | –20 | 10 | –20 | – | – | – | – |
| ≥500 | – | – | – | – | – | – | 18 | –20 | 18 | –20 |

- E. Seismic Load Parameters.

| | | |
|---|---|---|
| 1. | Seismic Importance Factor, $I_E$ | 1.00 |
| 2. | Spectral Response Acceleration, $S_S$ | 0.27 |
| 3. | Spectral Response Acceleration, $S_1$ | 0.07 |
| 4. | Site Class | |
| 5. | Spectral Response Coefficient, $S_{DS}$ | 0.284 |
| 6. | Spectral Response Coefficient, $S_{D1}$ | 0.110 |
| 7. | Seismic Design Category | B |
| 8. | Response Modification Factor, R | 3 |
| 9. | Overstrength Factor, Ω | 3 |
| 10. | Deflection Amplification Factor, $C_d$ | 3 |

  11. Seismic Force Resisting System
     a. Building 1: Attached to existing building
     b. Building 1 Gate: Cantilever Columns
     c. Building 3: Steel Moment Frames not specifically detailed for seismic resistance
     d. Building 5: Attached to existing building
     e. Building 7: Attached to existing building

  12. Analysis Procedure
     a. Equivalent Lateral Force

1.5 LATERAL LOAD RESISTING SYSTEM
- A. All lateral load resistance and stability of the building in the completed structure is provided by braced frames and cantilevered columns, framed in each orthogonal direction (see plan sheets, S1.XX series, for location and see lateral system elevation sheets, S2.XX series, for frame elevations. The brace frame columns are also highlighted in the column schedule, S3.XX series). The composite metal deck and concrete floors serve as horizontal diaphragms that distribute the lateral wind and seismic forces horizontally to the vertical braced frames. The vertical braced frames carry the applied lateral loads to the building foundation.

PART 2 – FOUNDATIONS

2.1 REFERENCE GEOTECHNICAL REPORT
  14. Foundation design is in accordance with the recommendations provided by the preliminary geotechnical report from Haley and Aldrich dated 30 July 2015.

2.2 FOUNDATION DESIGN PARAMETERS
- A. Spread Footings:
  1. Footings are designed for a maximum allowable bearing pressure of 1 TSF.
- B. Timber Piles
  1. See section 7 of General Notes.

2.3 EXCAVATION
- A. All foundation excavation to be inspected by the Geotechnical Engineer.
- B. The elevations shown on the drawings are anticipated and actual elevations are to be established in the field by the Geotechnical Engineer, but in no case shall the bottom of spread footings or grade beams be located less than 4 feet below the lowest adjacent surface exposed to freezing and 1 foot 6 inches below the bottom of the floor slab for interior spaces.

2.4 BACKFILL UNDER SLAB ON GRADE
- A. Backfill where required below slabs with first a layer of 18 in of approved granular soil placed compacted to 95% density at optimum moisture content as defined by ASTM D1557, Method D and then in 10 to 12 in layers of approved granular soil placed compacted to 95% density at optimum moisture content as defined by ASTM D1557, Method D.

2.5 BACKFILL AGAINST WALLS AND GRADE BEAMS
- A. Do not backfill against walls until wall concrete is at full design strength.
- B. Backfill per Geotechnical Report.
- C. Foundation walls shall have all permanent horizontal construction in place and at full design strength prior to backfilling walls.

2.6 FOUNDATION PLACEMENT AND PROTECTION
- A. Do not place foundation concrete in water or on frozen ground.
- B. Protect in–place foundations and slabs from frost penetration until the project is complete. Do not use salt or chloride compounds to de–ice the site.

PART 3 – CONCRETE WORK

3.1 CONCRETE MIX PROPERTIES

| A. Element | 28 day strength | W/C | Air Content (Max.) |
|---|---|---|---|
| 1. Slabs–on–grade (exterior) | 5,000 psi | 0.40 | 6% +/– 1.5 |
| 2. Slabs–on–grade (interior) | 4,000 psi | 0.40 | as mixed |
| 3. Footings | 4,000 psi | 0.45 | 5% +/– 1.5 |
| 4. Foundation walls and pilasters | 4,000 psi | 0.45 | 5% +/– 1.5 |
| 5. Foundation piers | 4,000 psi | 0.45 | 5% +/– 1.5 |

- B. Portland Cement: ASTM C150, Type II.
- C. Density
  1. Normal weight = 145 pcf

3.2 BASE PLATE GROUT:
- A. 8,000 psi 28–day compressive strength.

3.3 STEEL REINFORCEMENT
- A. ASTM A615 Grade 60, deformed.
- B. ASTM A497 welded wire reinforcement (Use flat sheets only).
- C. Do not tack or spot–weld crossing bars.
- D. Epoxy–Coated Reinforcing Bars: ASTM A615, Grade 60, deformed bars, ASTM A 775, epoxy coated, with less than 2 percent damaged coating in each 12–inch (300–mm) bar length.

3.4 REINFORCEMENT AT OPENINGS
- A. U.O.N., provide (2)–#6 at each side of all openings in walls and slabs and extend 2 ft–6 in. beyond the opening or as detailed, except vertical bars at sides of openings in walls are to extend from floor to floor.
- B. Bars may be moved aside at openings or sleeves, but do not cut or omit.

3.5 SPLICING OF REINFORCEMENT:
- A. As shown on the typical details. Provide a lap of 8 in or 1½ spaces, whichever is larger, for WWR.
- B. Tie wires together at lap.
- C. All horizontal bars are continuous. Terminate with standard hook and splice with a tension lap splice.

3.6 MINIMUM REINFORCEMENT
- A. Reinforce all walls with at least #4@12 in. each way each face and (2)–#6 each edge.
- B. In slabs, provide at least 0.0018 times the area of concrete in each direction.

3.7 REINFORCEMENT SHOP DRAWINGS
- A. Submit for approval, complete bending and placing details of all reinforcement including welded wire reinforcement, indicating position of splices.
- B. Include accessory drawings.

3.8 MINIMUM CONCRETE CLEAR COVER

| | |
|---|---|
| A. Concrete placed against earth | 3 in. |
| B. Slabs–on–grade bottom | 3 in. |
| C. Slabs–on–grade top | 2 in. |
| D. Formed concrete exposed to earth, water or weather | 2 in. |
| E. Piers and pilasters (transverse reinforcement) | 2 in. |

3.9 POST–INSTALLED ANCHORS
- A. Expansion Anchors: Hilti Kwik Bolt TZ.
  1. Install per Hilti installation recommendations.
  2. Provide standard depth of embedment as listed by Hilti, U.O.N.
  3. Provide Stainless Steel anchors and hardware in all exterior applications.
- B. Adhesive Anchors in Concrete: Hilti HIT HY–200 Injection Adhesive Anchors
  1. Install per Hilti installation recommendations.
  2. Provide standard depth of embedment as listed by Hilti, U.O.N.
  3. Do not use in an overhead application.
  4. Provide Stainless Steel anchors and hardware in all exterior applications.
- C. Adhesive Anchors in Brick and Masonry: Hilti HIT HY–70 Injection Adhesive Anchors
  1. Install per Hilti installation recommendations.
  2. Provide standard depth of embedment as listed by Hilti, U.O.N.
  3. Do not use in an overhead application.
  4. Provide Stainless Steel anchors and hardware in all exterior applications.

3.10 EXISTING SURFACE TREATMENT
- A. Roughen all existing concrete surfaces common with new concrete to amplitude of ¼ inch.
- B. Existing concrete shall be considered concrete on this job at construction joints or where a secondary pour is required.

3.11 HOUSEKEEPING PADS AND CURBS
- A. Pads and curbs may be shown on plan in certain instances for reference only. See Architectural and Mechanical Drawings and Specifications and coordinate with equipment manufacturer's requirements and location.
- B. Provide the same concrete as base slab, U.O.N.

3.12 CONCRETE REPAIR
- A. Cracks in concrete
  1. Assume 100 linear feet of concrete will require routing and sealing.
  2. Provide a unit price for this work.

3.13 STANDARD SPECIFICATIONS
- A. CRSI Manual of Standard Practice
- B. ACI 318–05 – Building Code Requirements for Structural Concrete
- C. Follow the latest recommendations and specifications of the American Concrete Institute:
  1. ACI 301 Specifications for Structural Concrete
  2. ACI 302 Concrete Floor and Slab Construction
  3. ACI 304 Guide for Measuring, Mixing, Transporting and Placing Concrete
  4. ACI 305 Hot Weather Concreting
  5. ACI 306 Cold Weather Concreting
  6. ACI 315 ACI Detailing Manual
  7. ACI 347 Guide to Formwork for Concrete

PART 4 – STRUCTURAL STEEL

4.1 STRUCTURAL SHAPES
- A. Wide Flange Shapes ASTM A992 (Fy = 50 ksi)
- B. Hollow Structural Sections ASTM A500, Gr. B (Fy = 46 ksi)
- C. Angles ASTM A36, U.O.N. (Fy = 36 ksi)
- D. Channels ASTM A36, U.O.N. (Fy = 36 ksi)
- E. Plate ASTM A36, U.O.N. (Fy = 36 ksi)
- F. Pipe ASTM A53, Type E, Grade B or ASTM A501 (Fy=42ksi)

4.2 BOLTED CONNECTIONS
- A. ASTM A325 and A490.

4.3 ANCHOR RODS
- A. ASTM F1554 Grade 55 bolts (U.O.N.) with Supplementary Requirement S1 (weldability).

4.4 WELDING ELECTRODES
- A. Conform to AWS Specifications for electrodes based on welding process and the type and grade of steel. E70XX electrodes (MIN.) for fillet welds.

4.5 FABRICATION
- A. Shop fabricate to greatest extent possible by welding including beam stiffeners, column caps and bases, holes and connections.
- B. Submit complete shop drawings from field dimensions for the Architect's approval of all structural steel prior to fabrication.

4.6 ERECTION
- A. Provide anchor rods, steel wedges, threaded screws or shims to support and plumb all columns.
- B. Grout solid under base plates immediately after columns are plumb.
- C. Provide bearing plates and wall anchors or anchor rods for all beams resting on concrete and all other necessary connecting hardware.
- D. Set anchor rods using template.
- E. Do not field cut or field modify any structural steel without prior written approval by architect for each specific case.
- F. The building frame relies on the concrete slabs at strength and on the fully fastened roof deck for overall stability.

4.7 PAINT
- A. Shop prime all steel not encased in concrete or not fireproofed.
- B. See Architectural Drawings and Specifications for finish coat requirements.

4.8 HOT–DIP GALVANIZING
- A. All steel, including but not limited to structural members, connection materials and misc. metals, that is exposed to the exterior elements (weather) shall be hot–dip galvanized. All field welds, or areas where hot–dip galvanizing is damaged, shall be touched–up with a zinc–rich paint ("cold galvanizing") after steel is completely installed.

4.9 FRAMING
- A. Beams are equally spaced, U.O.N.
- B. Cantilevered beams are same size as back span, U.O.N.
- C. Bolt patterns shown on details illustrate the concept of the connection and do not necessarily show the actually number and arrangement of the bolts in the connection, unless specifically detailed.

4.10 STANDARD SPECIFICATIONS AND REFERENCE STANDARDS
- A. AISC 360–05 Specification for Structural Steel Buildings
- B. AISC 341–05 Seismic Provisions for Structural Steel Buildings, Including Supplement No.1
- C. AWS D1.1–04 Structural Welding Code – Steel

PART 5 – STEEL DECK

5.1 STEEL DECK
- A. Provide roof deck made from galvanized steel with minimum yield strength of 80 ksi.
- B. See Drawings and Specifications for gauge and profile.
- C. Provide sheet metal pour stops with thickness based on SDI criteria (SDI Publication #31); 14 gauge min. thickness.
- D. All Steel Deck and supporting members are sized and spaced assuming at least a two span condition for the metal deck. The steel deck supplier, installer and general contractor shall coordinate installation and shoring requirements for single span deck.

5.2 STANDARD SPECIFICATIONS
- A. AISC 360–05 – Specification for Structural Steel Buildings Part 16, Chapter I.
- B. AISI S100–07 – North American Specification for the Design of Cold–Formed Structural Steel Members.
- C. SDI C1.0–2006 Standard for Composite Steel Floor Deck
- D. AWS Structural Welding Code D1.3 1998 – Structural Welding Code – Sheet Steel
- E. Align deck flutes from sheet to sheet.

PART 6 – WOOD FRAMING

6.1 SAWN LUMBER
- A. All lumber to be Spruce–Pine–Fir (NLGA) #2 or better and Kiln Dried.

6.2 WOOD–PRESERVATIVE–TREATED LUMBER
- A. Preservative Treatment by Pressure Process: AWPA U1; Use Category UC3b for exterior construction not in contact with ground.
  1. Preservative Chemicals: Acceptable to authorities having jurisdiction and containing no arsenic or chromium. Do not use inorganic boron (SBX) for sill plates.
- B. Application: Treat all rough carpentry and the following unless otherwise indicated.
- C. Wood cants, nailers, curbs, equipment support bases, blocking, stripping, and similar members in connection with roofing, flashing, vapor barriers, and waterproofing.
  2. Wood sills, sleepers, blocking, and similar concealed members in contact with masonry or concrete.
  3. Wood framing and furring attached directly to the interior of below–grade exterior masonry or concrete walls.
  4. Wood framing members that are less than 18 inches (460 mm) above the ground in crawlspaces or unexcavated areas.
  5. Wood floor plates that are installed over concrete slabs–on–grade.

6.3 LAMINATE VENEER LUMBER (LVL)
- A. By Boise Cascade or approved equal.
- B. Structural Properties
  1. Fb min = 2600 psi
  2. Fv min = 285 psi
  3. E min = 1,900,000 psi.
- C. INSTALLATION
  1. Follow manufacturer's installation instructions.
  2. For top loaded multiple assemblies use manufacturer's recommendations.
  3. For side loaded double and triple assemblies use 3 rows 16d @ 12" o.c.
  4. For side loaded quadruple assemblies use 2 rows of ½ inch diameter bolts @ 12" o.c.

6.4 PLYWOOD
- A. Roof sheathing: ¾" inch APA Rated sheathing, Exposure 1, veneer plywood

6.5 FASTENERS
- A. Nails: Galvanized common wire.
- B. Bolts: ASTM A307 for all wood–to–wood connections.
- C. Screws: ASME B18.6.1 for all wood–to–wood and wood–to–steel connections U.O.N.
- D. Connectors: Simpson Strong–tie or approved equal.

6.6 NAILING SCHEDULE:
  Conform to Massachusetts State Building Code, 8th Edition

6.7 TYPICAL CONSTRUCTION NOTES:
- A. Built–up posts designated thus n–2x, where n is the number of 2x members.
- B. Lay plywood with face grain parallel to span, stagger all joints.
- C. Nail new plywood roof sheathing with 8d @ 12" o.c. (4" o.c. along panel edges).
- D. Keep LVL lumber dry while stored on site.

6.8 CONNECTOR SCHEDULE:
  Use prefabricated connection hardware at all locations where members frame into the sides of supports. Use skewed hangers where appropriate. All joists are to be connected with Simpson Strong–tie HU Heavy Duty (14 ga) joist hangers using the manufacturer's recommended fasteners. All beams are to be connected with Simpson Strong–tie hangers according to the following table using the manufacturer's recommended fasteners. All beams to be connected using bearing connections where possible. Beams Hangers shown are top flange hangers. In locations where face mount hangers are required, notify Engineer.

| Beam Size | Model No. | Design Reaction |
|---|---|---|
| (2) 2x6 | HU26–2TF | 3000# |
| (2) 2x8 | HU28–2TF | 3500# |
| (2) 2x10 | HU210–2TF | 4000# |
| (2) 2x12 | HU212–2TF | 4200# |
| (3) 2x10 | HU210–3TF | 4000# |
| (3) 2x12 | HU212–3TF | 4500# |

6.9 STANDARD SPECIFICATIONS
- A. AF&PA NDS–05 – National Design Specification for Wood Construction with 2005 Supplement.

PART 7 – TIMBER FOUNDATION PILES

7.1 GENERAL
- A. Provide, locate and install timber piles to support the proposed storage structure at the locations shown on the Pile Location and Foundation Plan, Figure 1.
- B. Piles based on preliminary geotechnical recommendations from Haley and Aldrich dated 30 July 2015.
  1. Pile capacity 5 tons minimum.

7.2 MATERIAL
- A. Piles shall be 16" tip natural taper, conforming to ASTM D–25 Timber Foundation Piles, pressure–treated to 0.80 pcf CCA retention in accordance with AWPA C3.
- B. Piles used shall be identified with a quality mark by an approved inspection agency certified by the American Lumber Standards Committee (ALSC).
- C. An original certificate from the lumber supplier attesting to the conformance of the piles supplied with the above specification, shall be provided by the Contractor to the Engineer prior to their installation.

7.3 PILE INSTALLATION
- A. Piles shall be driven to a minimum embedment of TDB below the present ground surface. Hammer driving energy shall be 20,000 ft–lbs. This specified energy combination must be verified by the Engineer.
- B. Piles shall be installed at the locations shown on the pile location plans.
- C. In accordance with Mass. Building Code, 8th edition, Inspection: the Engineer shall be present while piles are being driven to observe all work in connection with piles. The Contractor may perform work only in the presence of the Engineer, unless otherwise directed by the Geotechnical Consultant.

7.4 SUBMITTALS
- A. The Contractor shall submit to the Engineer for review, complete details of the proposed driving equipment.

7.5 MEASUREMENT
- A. Piles shall be measured and paid for based on a per–pile basis, assuming a 45ft–long pile.

SYMBOL LEGEND

| Symbol | Description |
|---|---|
| —●│●— | BEAM TO BEAM CANTILEVER MOMENT CONNECTION |
| —│— | STANDARD BEAM CONNECTION |
| ⟷ | DIRECTION OF DECK SPAN |
| (#) | NUMBER OF HEADED SHEAR STUDS |
| ☒ | SLAB OR ROOF DECK OPENING |
| | SLAB STEP/CHANGE IN ELEVATION |

ABBREVIATIONS:

| WORD or PHRASE | ABBREVIATION | WORD or PHRASE | ABBREVIATION |
|---|---|---|---|
| ASD | Allowable Stress Design | Jt | Joint |
| Alt. | Alternate | K | Kip (1,000 pounds) |
| ACI | American Concrete Institute | Ksf | Kips/Square Foot |
| AISC | American Institute of Steel Construction | LE | Left End |
| AISI | American Iron and Steel Institute | LW | Lightweight |
| ASTM | American Society for Testing and Materials | LWC | Lightweight Concrete |
| AWS | American Welding Society | LRFD | Load & Resistance Factor Design |
| AB | Anchor Bolt | LLH | Long Leg Horizontal |
| Arch. | Architect | LLV | Long Leg Vertical |
| @ | At | LP | Low Point |
| B or Bot. | Bottom | Max. | Maximum |
| BEW | Bottom Each Way | Mech. | Mechanical |
| CEP | Central Energy Plant | MEP+T | Mechanical, Electrical, Plumbing and Technology |
| CIP | Cast–in–Place | Min. | Minimum |
| CG | Center of Gravity | NF | Near Face |
| Ctrd. | Centered | NIC | Not In Contract |
| ℄ | Centerline | NWC | Normal Weight Concrete |
| Clr. | Clear | NTS | Not to Scale |
| Col. | Column | No. or # | Number |
| Conc. | Concrete | OC | On Center |
| CMU | Concrete Masonry Unit | O.D. | Outer Diameter |
| CRSI | Concrete Reinforcing Steel Institute | Pl. or ℄ | Plate |
| Const. | Construction | PLF | Pounds/Linear Foot |
| Const. Jt. or CJ | Construction Joint | PVC | Polyvinyl Chloride |
| Cont. | Continuous | Psf | Pounds/Square Foot |
| Det. | Detail | Psi | Pounds/Square Inch |
| Dia. or ø | Diameter | P/C | Pre–cast |
| Dim. | Dimension | Ref. | Reference |
| Dir. | Direction | Reinf. | Reinforce or Reinforcement |
| Dwls | Dowels | RE | Right End |
| Dn | Down | RD | Roof Drain |
| Dwg | Drawing | Sect. | Section |
| Ea. | Each | SC | Shear Connector or Slip Critical Bolt |
| EE | Each End | SCJ | Slab Control Joint |
| EF | Each Face | SH | Shear Head |
| ES | Each Side | SLV | Short Leg Vertical |
| EW | Each Way | Sim. | Similar |
| El. | Elevation | SJI | Steel Joist Institute |
| Elev. | Elevator | SOG | Slab–on–Grade |
| EOS | Edge of Slab | Sq. | Square |
| EOR | Engineer of Record | SS | Stainless Steel |
| EP | Embed Plate | Std | Standard |
| Eq. | Equal | Stl | Steel |
| Exp. Bolt | Expansion Bolt | SDI | Steel Deck Institute |
| Exp. Jt or EJ | Expansion Joint | Stiff. | Stiffener |
| Ext. | Exterior | Str. | Structural |
| FF | Far Face | Sym. | Symmetrical |
| Ft or ' | Feet | T | Top |
| Fin. | Finish | T&B | Top & Bottom |
| Fin. Fl. | Finish Floor | TOC | Top of Concrete |
| Fl. | Floor | TOS | Top of Steel |
| FD | Floor Drain | TOW | Top of Wall |
| FP | Full Penetration Weld | Typ. | Typical |
| FS | Footing Steps | UON | Unless Otherwise Noted |
| Galv. | Galvanized | V or Vert. | Vertical |
| Ga | Gauge | VEF | Vertical Each Face |
| Gr. | Grade | VIF | Vertical Inside Face |
| GB | Grade Beam | VIF | Verify in Field |
| HP | High Point | VOF | Vertical Outside Face |
| HSS | Hollow Structural Section | WWR | Welded Wire Reinforcement |
| H or Horiz. | Horizontal | WP | Working Point |
| HEF | Horizontal Each Face | | |
| HIF | Horizontal Inside Face | | |
| HOF | Horizontal Outside Face | | |
| In. or " | Inch | | |
| Incl. | Inclusive or Including | | |
| Info. | Information | | |


MPA MARGULIES PERRUZZI ARCHITECTS
308 Congress Street | Boston, MA 02210 | 617.482.3232 | www.mp-architects.com
Design for the way you work.


CLIENT INFORMATION
AS CLOCK TOWER OWNER, LLC c/o SARACEN PROPERTIES

MILL & MAIN RENOVATION PHASE 1
146 MAIN STREET
MAYNARD, MA 01751


CONSULTANT INFORMATION

MEP ENGINEERS
AHA CONSULTING ENGINEERS
24 HARTWELL AVE., 3RD FLOOR
LEXINGTON, MA 02421
781-372-3200

CIVIL ENGINEER
NITSCH ENGINEERING
2 CENTER PLAZA, SUITE 430
BOSTON, MA 02108
617-542-8552

SPECIFICATIONS
KALIN ASSOCIATES
1121 WASHINGTON ST., #2
WEST NEWTON, MA 02465
617-964-5477

HARDWARE CONSULTANT
CAMPBELL-MCCABE, INC.
1 CLOCK TOWER PLACE
MAYNARD, MA 01754
781-899-8822

LANDSCAPE DESIGN
BROWN, RICHARDSON, & ROWE
3 POST OFFICE SQUARE, 3RD FLOOR
BOSTON, MA, 02109
617-542-8552

LIGHTING CONSULTANTS
SLADEN FEINSTEIN INTEG.
295 HUNTINGTON AVE., #305
BOSTON, MA 02115
617-267-9500

STRUCTURAL ENGINEER
SIMPSON GUMPERTZ & HEGER
41 SEYON STREET, BLDG 1, SUITE 500
WALTHAM, MA 02453
781-907-9000

GEOTECHNICAL CONSULTANT
HALEY & ALDRICH, INC.
465 MEDORD STREET, SUITE 2200
BOSTON, MA 02129
617-886-7399


REVISIONS

| NUMBER | DESCRIPTION | DATE |
|---|---|---|
| | | |

STAMP

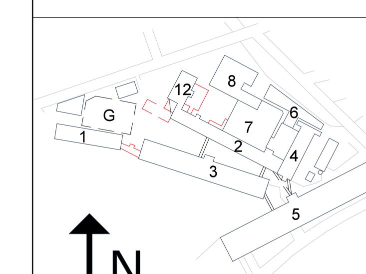


KEY PLAN

DATE..........10/19/2015
SCALE..........
DRAWN BY..........MAT
PROJECT NUMBER.....SAR15A.00
DRAWING TITLE
GENERAL NOTES

S-000
DRAWING NUMBER

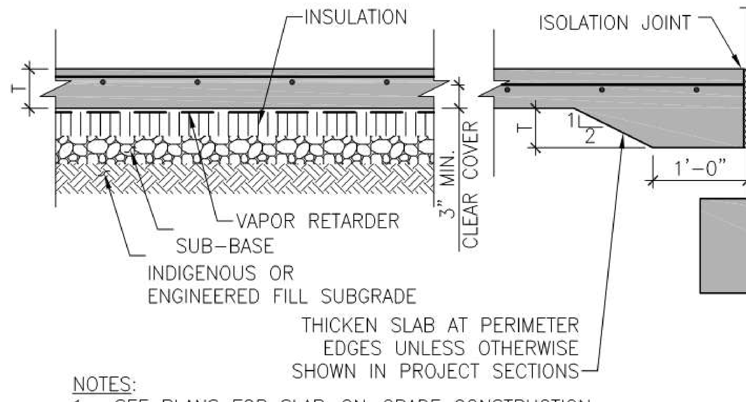


NOTES:
1. SEE PLANS FOR SLAB-ON-GRADE CONSTRUCTION.
2. SEE ARCH DRAWINGS AND SPECIFICATIONS FOR VAPOR BARRIER.
3. SEE PLANS, GENERAL NOTES AND/OR SPECIFICATIONS FOR SUB-BASE AND/OR SUBGRADE REQUIREMENTS.
4. SEE GENERAL NOTES FOR ADDITIONAL REINFORCING BAR CONCRETE COVER REQUIREMENTS.
5. SEE ARCHITECTURAL DRAWINGS FOR INSULATION REQUIREMENTS.

## 1 TYPICAL SLAB-ON-GRADE DETAIL
N.T.S.

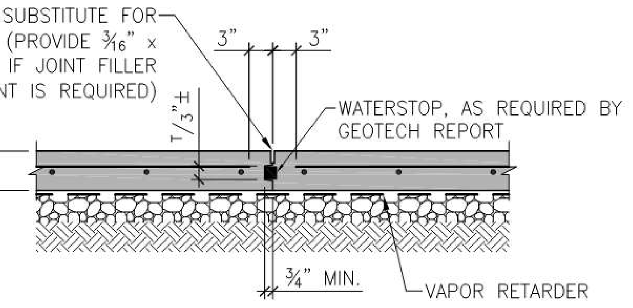


NOTES:
1. PROVIDE FORMED KEY AT CONSTRUCTION JOINT.
2. DETAIL REINFORCEMENT TO STOP AT JOINT.
3. SEE SPECIFICATIONS FOR JOINT FILLER AND SEALANT REQUIREMENTS.
4. SEE ARCHITECTURAL DRAWINGS FOR INSULATION REQUIREMENTS.

## 2 SLAB-ON-GRADE CONSTRUCTION JOINT
N.T.S.

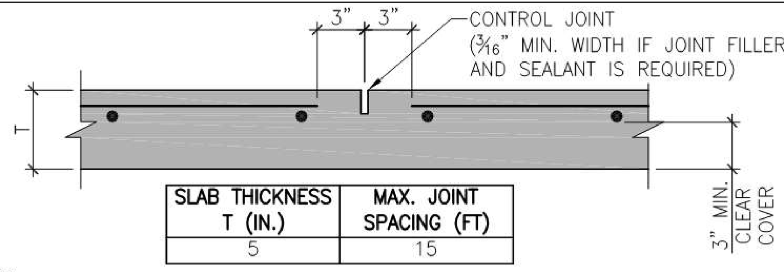


| SLAB THICKNESS T (IN.) | MAX. JOINT SPACING (FT) |
|---|---|
| 5 | 15 |

NOTES:
1. SAW CUT 1" (MIN.) DEEP JOINT WITH EARLY ENTRY SAW AS SOON AS POSSIBLE AFTER FINISHING SLAB. (4 TO 8 HOURS MAX.)
2. DETAIL REINFORCEMENT TO STOP AT JOINTS AS INDICATED.
3. LOCATE CONTROL JOINTS ON A RECTANGULAR GRID AND SUBMIT LAYOUT OF CONTROL JOINTS FOR APPROVAL UNLESS JOINT LOCATIONS ARE OTHERWISE SPECIFIED. NO RE-ENTRANT CORNERS ARE PERMITTED. CM TO ENSURE CONTROL JOINT GEOMETRY IS CONSISTENT WITH SEALANT REQUIREMENTS.
4. ASPECT RATIO OF RECTANGLES SHALL NOT EXCEED 1.25.
5. SEE PLANS, GENERAL NOTES AND/OR SPECIFICATIONS FOR JOINT FILLER REQUIREMENTS. VERSA FLEX SEALANT AT BASEMENT AND LOADING DOCK; SIKO SEALANT AT OTHER INTERIOR SPACES. REFER TO DIVISION 7 SPECIFICATION.
6. SEE PLANS FOR SLAB CONSTRUCTION.
7. SEE GENERAL NOTES FOR ADDITIONAL REINFORCING BAR CLEAR COVER REQUIREMENTS.

## 3 CONTROL JOINT IN SLAB-ON-GRADE
N.T.S.

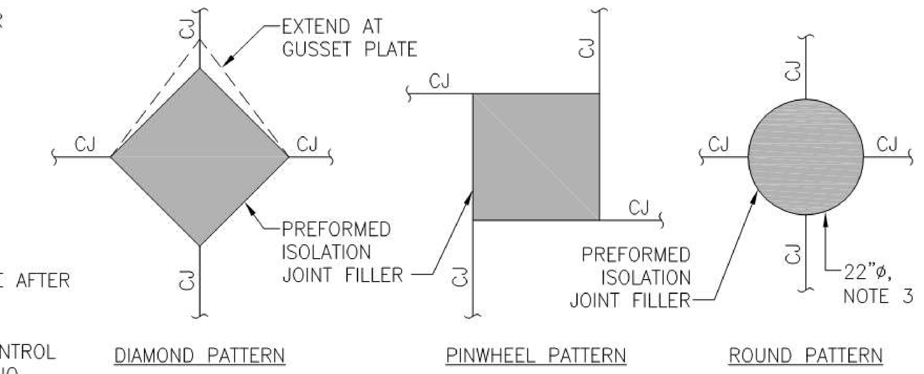


NOTES:
1. REMOVE TOP INCH OF PREFORMED ISOLATION JOINT FILLER AND SEAL JOINT AS REQUIRED FOR CONTROL JOINTS.
2. AT PINWHEEL PATTERN, CONTRACTOR HAS OPTION OF PLACING ISOLATION JOINT TIGHT TO COLUMN AND SAW CUT PINWHEEL PATTERN.
3. COORDINATE SIZE WITH ARCHITECTURAL DRAWINGS

## 4 SLAB-ON-GRADE ISOLATION JOINT
N.T.S.

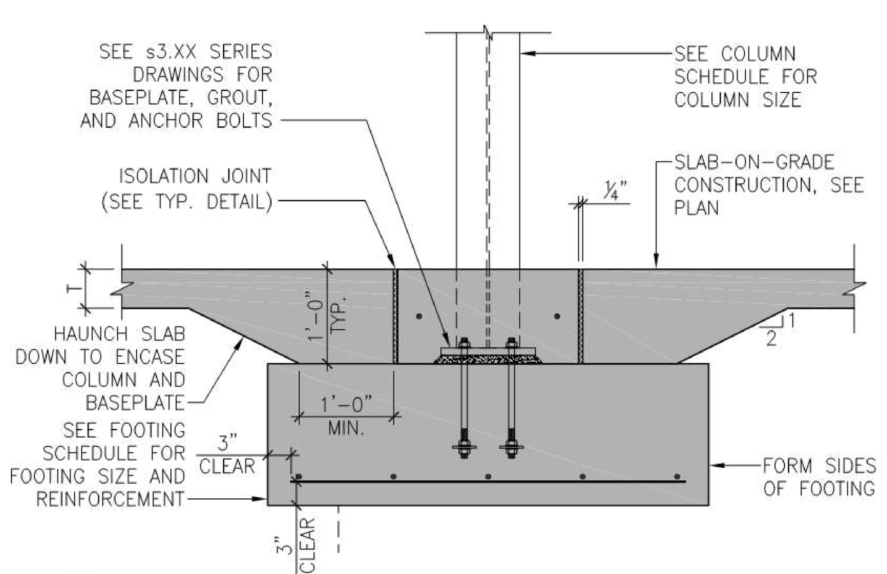


## 5 STEEL COLUMN FOOTING
N.T.S.

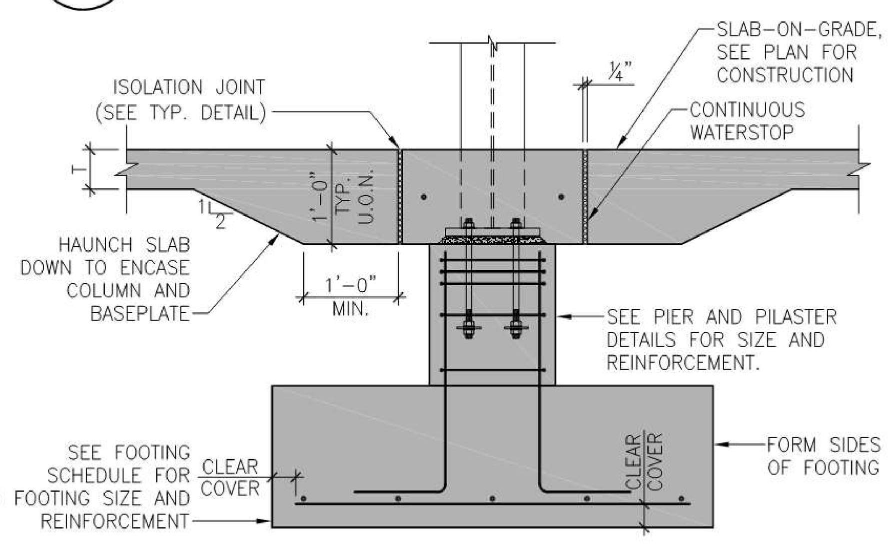


## 6 STEEL COLUMN FOOTING WITH PIER
N.T.S.

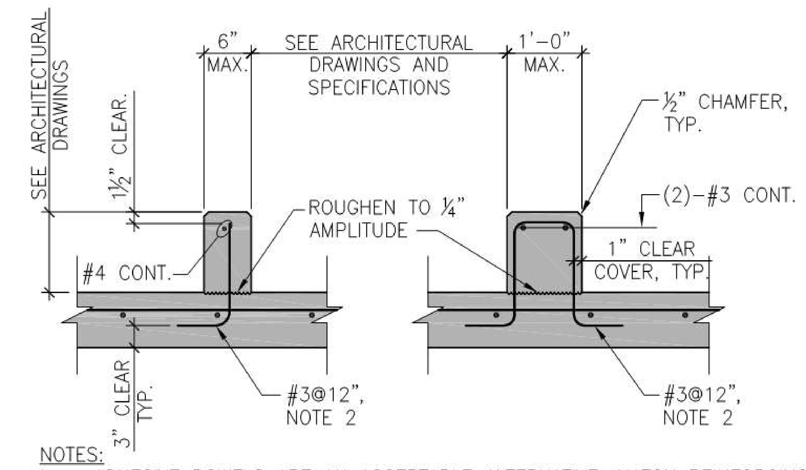


NOTES:
1. ADHESIVE DOWELS ARE AN ACCEPTABLE ALTERNATIVE. MATCH REINFORCING BAR SIZE AND SPACING SHOWN. PROVIDE A MINIMUM EMBEDMENT OF 2½".
2. IF SOG IS EXISTING DOWEL WITH 2¾" EMBED WITH HILTI HIT-HY 150.

## 7 CONCRETE CURB AT SLAB-ON-GRADE
N.T.S.

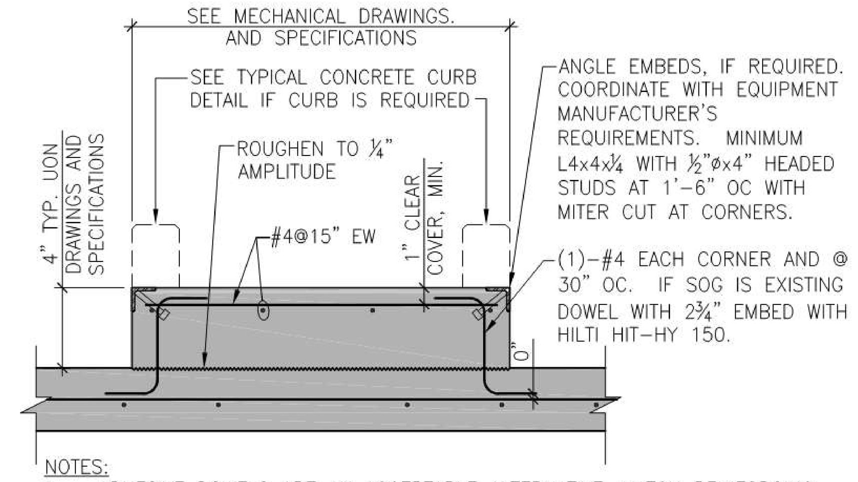


NOTES:
1. ADHESIVE DOWELS ARE AN ACCEPTABLE ALTERNATIVE. MATCH REINFORCING BAR SIZE AND LOCATIONS SHOWN. PROVIDE A MINIMUM EMBEDMENT OF 2½".
2. PROVIDE 1" CHAMFER IF CONTINUOUS STEEL ANGLES ARE NOT REQUIRED.
3. IF SOG IS EXISTING DOWEL WITH 2¾" EMBED WITH HILTI HIT-HY 150.

## 8 EQUIPMENT PAD AT SLAB-ON-GRADE
N.T.S.

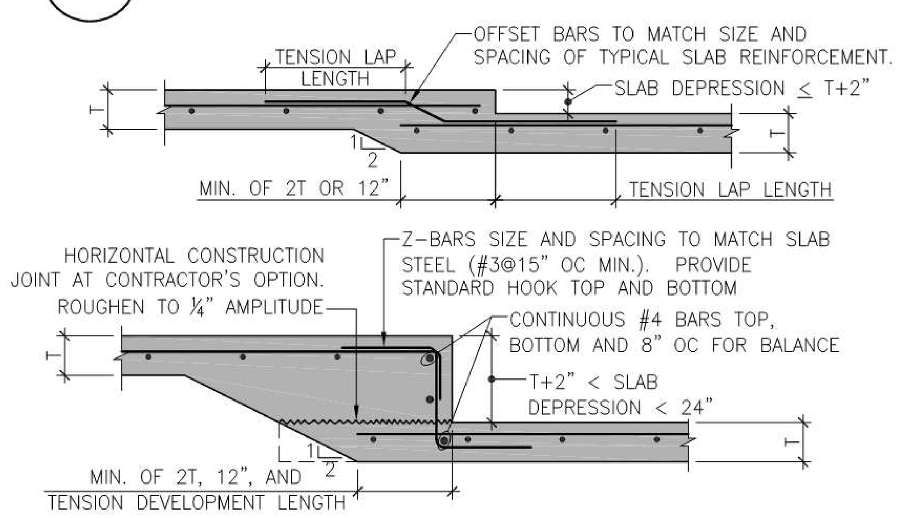


NOTES:
1. SEE PLANS FOR SLAB CONSTRUCTION.

## 8 DEPRESSIONS AT SLAB-ON-GRADE
N.T.S.

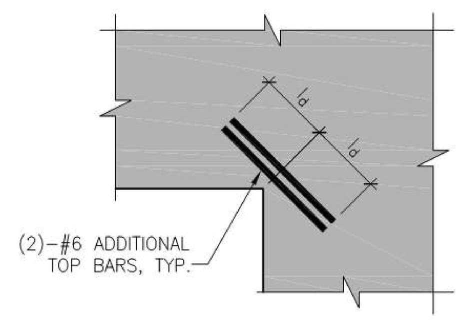


NOTES:
1. $l_d$ = DEVELOPMENT LENGTH IN CONCRETE.

## 9 TYPICAL SLAB REINFORCEMENT AT RE-ENTRANT CORNER
N.T.S.

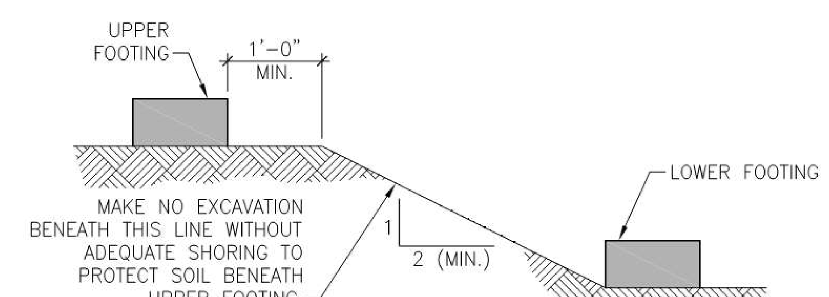


## 10 SLOPE BETWEEN FOOTINGS
N.T.S.

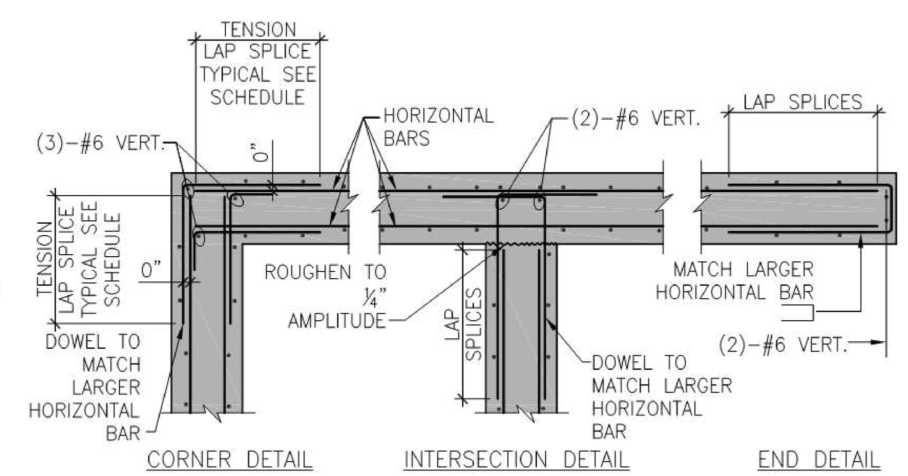


## 11 HORIZONTAL WALL REINFORCEMENT DETAILS
N.T.S.

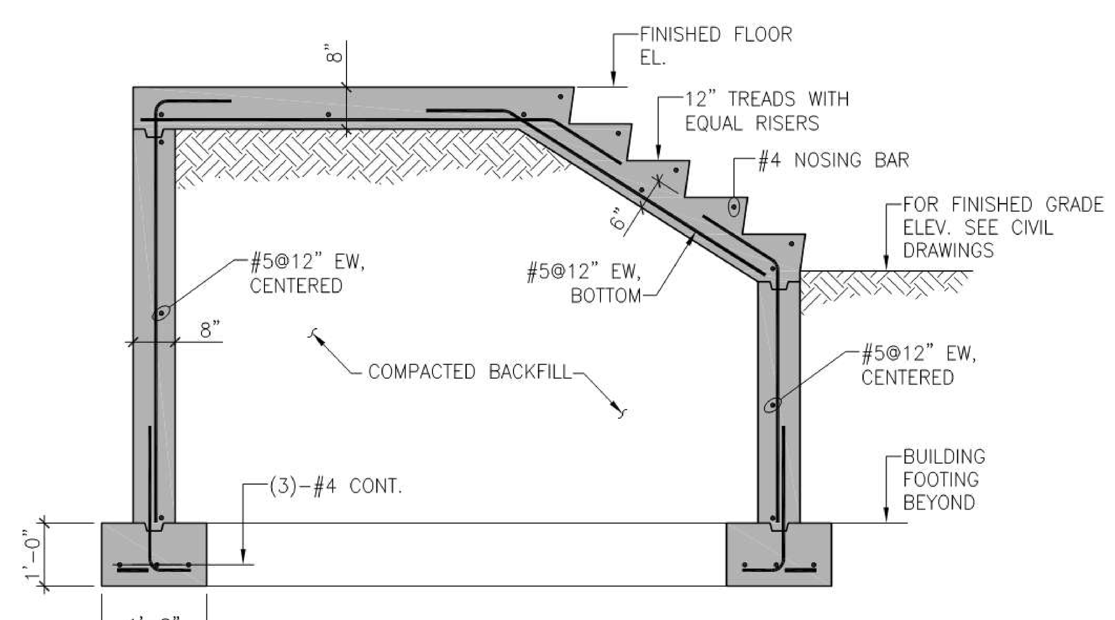


NOTE:
SEE ARCH. DRAWINGS FOR RAILING DETAILS

## 12 CIP CONCRETE STAIRS
NTS

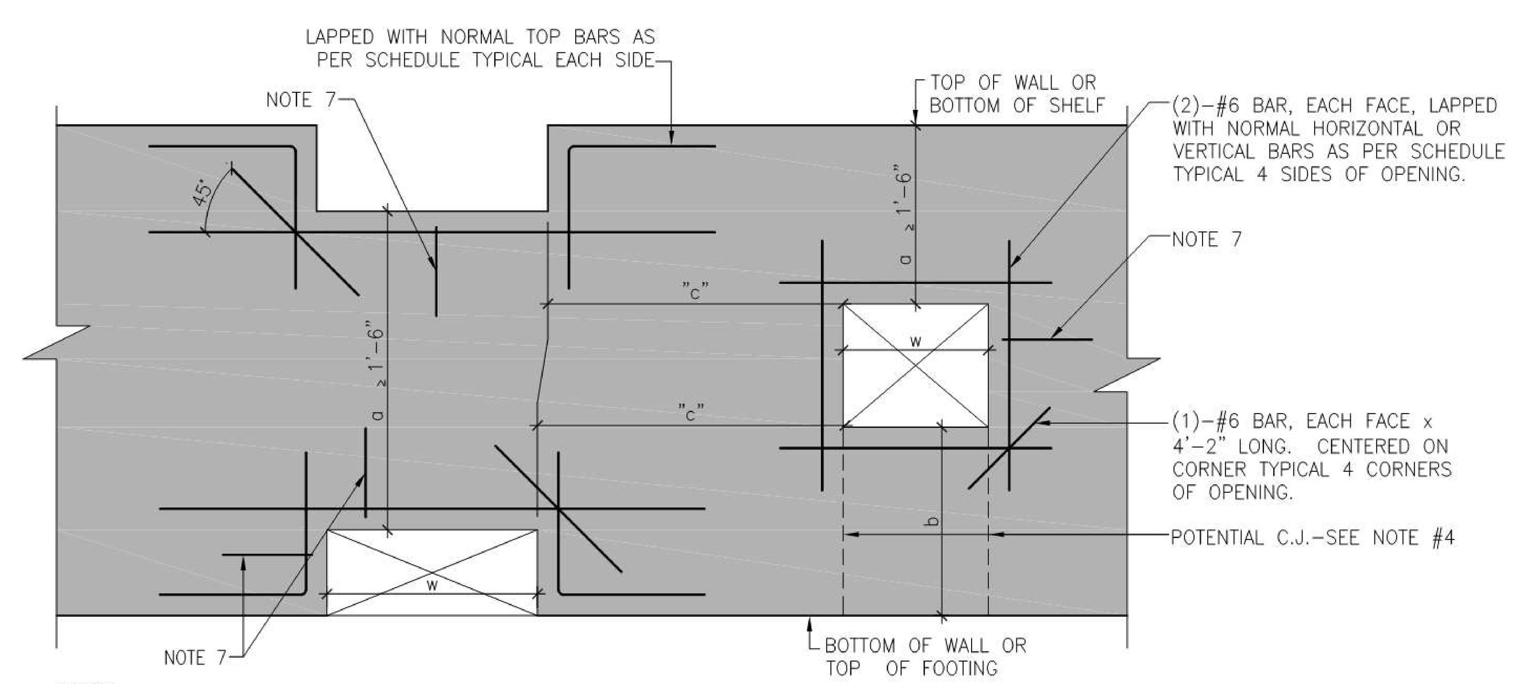


NOTES:
1. NORMAL HORIZONTAL AND VERTICAL REINFORCING NOT SHOWN FOR CLARITY.
2. OPENINGS ARE SHOWN SQUARE AND RECTANGULAR. CIRCULAR OPENINGS REQUIRE THE SAME DETAILS AND REINFORCEMENT.
3. WHEN DIMENSION "a" < 0.5 w, REPLACE U-SHAPED BARS WITH CLOSED STIRRUPS. SPACE CLOSED STIRRUPS TO MATCH VERTICAL WALL REINFORCING BUT NOT GREATER THAN "a"/2.
4. WHERE DIMENSION "b" < W/2 AND PLACING/FINISHING OF CONCRETE BELOW OPENING IS DIFFICULT, THE GENERAL CONTRACTOR MAY ELECT TO ADD VERTICAL CONSTRUCTION JOINTS THAT ALIGN WITH THE EDGES OF THE OPENINGS PROVIDED THAT ALL REINFORCEMENT IS CONTINUOUS THROUGH THE JOINTS.
5. WHEN DIMENSION "c" IS LESS THAN 6'-0", THE ENGINEER MAY REQUIRE SPECIAL REINFORCEMENT AROUND THE OPENINGS. SUBMIT THESE OPENINGS TO THE ENGINEER FOR REVIEW.
6. REFER TO ALL THE CONTRACT DRAWINGS TO DETERMINE THE SIZES AND LOCATIONS OF ALL OPENINGS THROUGH THE CONCRETE WALLS.
7. WHERE NOTED, U-SHAPED BARS TO MATCH INTERRUPTED HORIZONTAL OR VERTICAL BARS, LAPPED WITH NORMAL HORIZONTAL OR VERITCAL BARS AS PER SCHEDULE. TYPICAL 4 SIDES OF OPENING.

## 13 OPENING THROUGH CONCRETE WALL DETAIL
N.T.S.

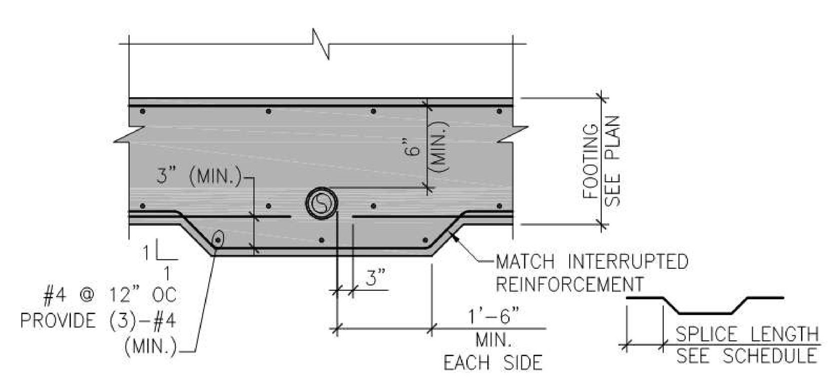


NOTES:
1. FOR DETAILS NOT NOTED, SEE "TYPICAL CONDITIONS FOR PIPES BELOW GRADE" DETAIL.
2. FOR ADDITIONAL INFORMATION, SEE "TYPICAL PIPE SLEEVE DETAIL" AND "TYPICAL ADDITIONAL REINFORCEMENT @ PIPE SLEEVE" DETAIL.

## 14 TYPICAL PENETRATION THROUGH FOOTING
N.T.S.

MPA MARGULIES PERRUZZI ARCHITECTS
308 Congress Street | Boston, MA 02210 | 617.482.3232 | www.mp-architects.com
Design for the way you work.

CLIENT INFORMATION
AS CLOCK TOWER OWNER, LLC c/o SARACEN PROPERTIES
MILL & MAIN RENOVATION PHASE 1
146 MAIN STREET
MAYNARD, MA 01751

CONSULTANT INFORMATION

MEP ENGINEERS
AHA CONSULTING ENGINEERS
24 HARTWELL AVE., 3RD FLOOR
LEXINGTON, MA 02421
781-372-3200

CIVIL ENGINEER
NITSCH ENGINEERING
2 CENTER PLAZA, SUITE 430
BOSTON, MA 02108
617-542-8552

SPECIFICATIONS
KALIN ASSOCIATES
1121 WASHINGTON ST., #2
WEST NEWTON, MA 02465
617-964-5477

HARDWARE CONSULTANT
CAMPBELL-MCCABE, INC.
1 CLOCK TOWER PLACE
MAYNARD, MA 01754
781-899-8822

LANDSCAPE DESIGN
BROWN, RICHARDSON, & ROWE
3 POST OFFICE SQUARE, 3RD FLOOR
BOSTON, MA, 02109
617-542-8552

LIGHTING CONSULTANTS
SLADEN FEINSTEIN INTEG.
295 HUNTINGTON AVE., #305
BOSTON, MA 02115
617-267-9500

STRUCTURAL ENGINEER
SIMPSON GUMPERTZ & HEGER
41 SEYON STREET, BLDG 1, SUITE 500
WALTHAM, MA 02453
781-907-9000

GEOTECHNICAL CONSULTANT
HALEY & ALDRICH, INC.
465 MEDORD STREET, SUITE 2200
BOSTON, MA 02129
617-886-7399

REVISIONS

| NUMBER | DESCRIPTION | DATE |
|---|---|---|

STAMP

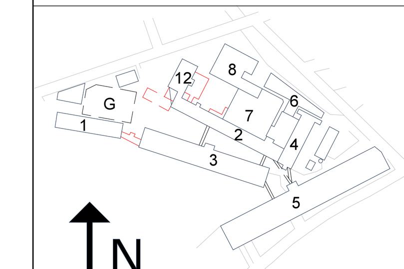

KEY PLAN

DATE..........10/19/2015
SCALE..........
DRAWN BY..........MAT
PROJECT NUMBER.....SAR15A.00
DRAWING TITLE
CONCRETE TYPICAL DETAILS (1 OF 2)

S-010
DRAWING NUMBER

| BAR SIZE | TENSION DEVELOPMENT LENGTH | | | | | | COMPRESSION DEVELOPMENT LENGTH | | | TENSION LAP/SPLICE LENGTH | | | | | | COMPRESSION LAP/SPLICE LENGTH | | |
|---|---|---|---|---|---|---|---|---|---|---|---|---|---|---|---|---|---|---|
| | TOP BARS | | | OTHER BARS | | | ALL BARS | | | TOP BARS | | | OTHER BARS | | | ALL BARS | | |
| | 3000 PSI | 4000 PSI | 5000 PSI | 3000 PSI | 4000 PSI | 5000 PSI | 3000 PSI | 4000 PSI | 5000 PSI | 3000 PSI | 4000 PSI | 5000 PSI | 3000 PSI | 4000 PSI | 5000 PSI | 3000 PSI | 4000 PSI | 5000 PSI |
| #3 | 22 | 19 | 17 | 17 | 15 | 13 | 9 | 8 | 8 | 29 | 20 | 23 | 23 | 20 | 17 | 12 | 12 | 12 |
| #4 | 29 | 25 | 23 | 22 | 19 | 17 | 11 | 10 | 9 | 38 | 33 | 30 | 29 | 25 | 23 | 15 | 15 | 15 |
| #5 | 36 | 31 | 28 | 28 | 24 | 22 | 14 | 12 | 12 | 47 | 41 | 37 | 37 | 32 | 29 | 19 | 19 | 19 |
| #6 | 43 | 37 | 34 | 33 | 29 | 26 | 17 | 15 | 14 | 56 | 49 | 45 | 43 | 38 | 34 | 23 | 23 | 23 |
| #7 | 63 | 54 | 49 | 48 | 42 | 38 | 20 | 17 | 16 | 82 | 71 | 64 | 63 | 55 | 50 | 27 | 27 | 27 |
| #8 | 72 | 62 | 56 | 55 | 48 | 43 | 22 | 19 | 18 | 94 | 81 | 73 | 72 | 63 | 56 | 30 | 30 | 30 |
| #9 | 81 | 70 | 63 | 62 | 54 | 48 | 25 | 22 | 21 | 106 | 91 | 82 | 81 | 71 | 63 | 34 | 34 | 34 |
| #10 | 91 | 79 | 71 | 70 | 61 | 54 | 28 | 24 | 23 | 119 | 103 | 93 | 91 | 80 | 71 | 38 | 38 | 38 |
| #11 | 101 | 87 | 78 | 78 | 67 | 60 | 31 | 27 | 25 | 132 | 114 | 102 | 102 | 88 | 78 | 42 | 42 | 42 |

NOTES:
1. REFER TO "HOOKED TENSION DEVELOPMENT LENGTH SCHEDULE" WHEN THE STRAIGHT DEVELOPMENT LENGTH IN TENSION CANNOT BE ACCOMMODATED IN THE CONCRETE SECTION.
2. ALWAYS USE TENSION DEVELOPMENT LENGTH AND TENSION LAP SPLICE LENGTH VALUES, UNLESS THE PLANS OR DETAILS NOTE SPECIFICALLY COMPRESSION LENGTH IS ALLOWED.
3. TABULATED DEVELOPMENT AND LAP SPLICE LENGTHS ARE BASED ON REINFORCING STEEL YIELD STRENGTH $F_y$=60 KSI, NORMAL WEIGHT CONCRETE, AND CLASS B LAPS.
4. TOP BARS ARE DEFINED AS HORIZONTAL BARS WITH MORE THAN 12 INCHES OF FRESH CONCRETE CAST IN THE MEMBER BELOW THE DEVELOPMENT LENGTH OR SPLICE. TOP BAR FACTOR DOES NOT APPLY TO BARS IN WALLS.
5. WHEN DIFFERENT BAR DIAMETERS ARE SPLICED, USE LARGER BAR LAP SPLICE LENGTH.
6. ALL TABULATED VALUES ARE MINIMUM LENGTHS, IN CASE OF CONFLICT WITH PLANS, SECTIONS, OR DETAILS USE THE LONGER LENGTH.
7. $d_b$ = BAR DIAMETER.
8. $l_d$ = DEVELOPMENT, LAP OR SPLICE LENGTH.
9. ADJUST TABULATED LENGTHS BY THE FOLLOWING FACTORS WHERE APPLICABLE. NOTE THAT FACTORS ARE CUMULATIVE: (E.G. 1.30x1.50 = 1.95)
   - A. LIGHT WEIGHT CONCRETE: 1.30
   - B. 3 OR LESS BUNDLED BARS: 1.20
   - C. 4 OR MORE BUNDLED BARS: 1.33
   - D. CLEAR SPACING LESS THAN $2d_b$ AND CLEAR COVER LESS THAN $d_b$ 1.50
   - E. CLASS A LAP SPLICE 0.77
   - F. EPOXY COATED BARS 1.50
10. WELDED AND/OR MECHANICAL SPLICES MAY BE USED AT THE GENERAL CONTRACTOR'S OPTION PROVIDED THAT THE SPLICE IS CAPABLE OF DEVELOPING AT LEAST 125% OF THE YIELD STRENGTH OF THE LARGER BAR IN TENSION. WHERE WELDED AND/OR MECHANICAL SPLICES ARE TO BE USED, THE GENERAL CONTRACTOR SHALL SUBMIT FULL DATA ON THE PROPOSED MATERIAL, PROCEDURES, AND INSTALLATION INSTRUCTIONS TO THE ENGINEER FOR REVIEW AS A SHOP DRAWING SUBMISSION.
11. USE MECHANICAL COUPLERS FOR #14 AND LARGER BARS.
12. LAP SPLICES IN CONCRETE MASONRY SHALL BE AS SPECIFIED IN "TYP. LAP SPLICE SHEDULE – MASONRY".
13. USE MECHANICAL COUPLERS FOR #14 AND LARGER BARS.

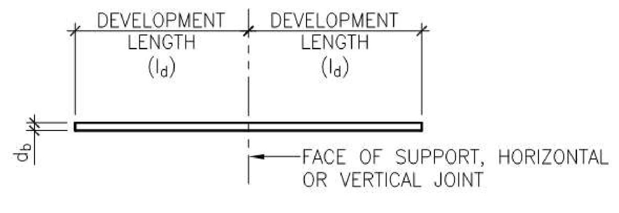


DEVELOPMENT

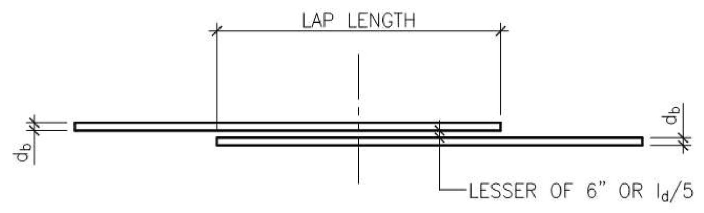


TENSION LAP/SPLICE LENGTH

## 1 STRAIGHT REINFORCEMENT DEVELOPMENT AND SPLICE LENGTH SCHEDULE

N.T.S.

| BAR SIZE | D (IN.) |
|---|---|
| #3 | 1½ |
| #4 | 2 |
| #5 | 2½ |

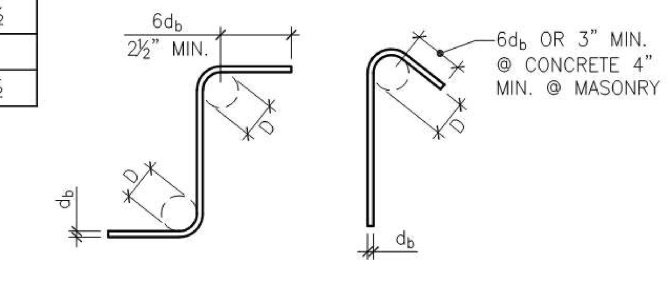


90 DEGREE HOOK

135 DEGREE HOOK

NOTES:
1. ALL BENDS SHALL BE MADE COLD.
2. $d_b$ = BAR DIAMETER.

## 2 TYPICAL TIE AND STIRRUP HOOKS

N.T.S.

| BAR SIZE | D (IN.) |
|---|---|
| #3 | 2¼ |
| #4 | 3 |
| #5 | 3¾ |
| #6 | 4½ |
| #7 | 5¼ |
| #8 | 6 |
| #9 | 9 |
| #10 | 10¼ |
| #11 | 11¼ |

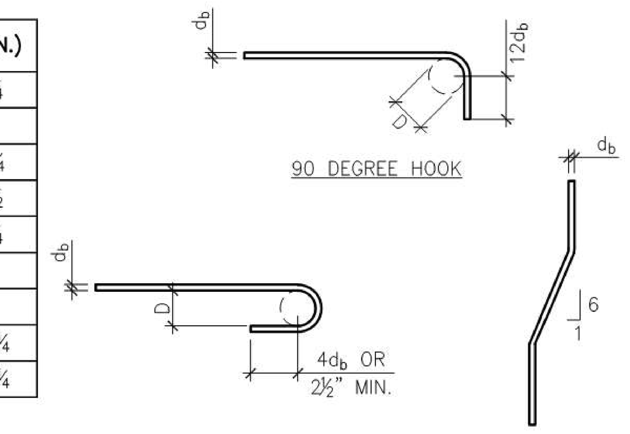


180 DEGREE HOOK

REBAR BEND

NOTES:
1. ALL BENDS SHALL BE MADE COLD.
2. $d_b$ = BAR DIAMETER.

## 3 TYPICAL REINFORCEMENT BENDS

N.T.S.

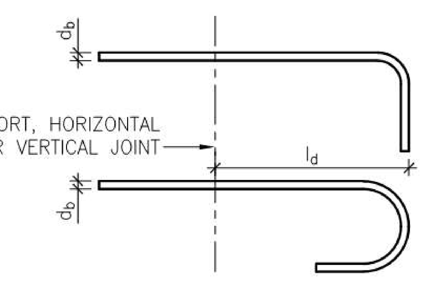


NOTES:
1. SEE TYPICAL TIE AND STIRRUP HOOKS DETAIL FOR ADDITIONAL INFORMATION.
2. TABULATED DEVELOPMENT LENGTHS ARE BASED ON REINFORCING STEEL YIELD STRENGTH $F_y$ = 60 KSI AND NORMAL WEIGHT CONCRETE.
3. ALL TABULATED VALUES ARE MINIMUM LENGTHS. IN CASE OF CONFLICT WITH THE PLANS, SECTIONS, OR DETAILS, USE THE LONGER LENGTH.
4. $d_b$ = BAR DIAMETER
5. $l_d$ = DEVELOPMENT LENGTH
6. ADJUST TABULATED LENGTHS BY THE FOLLOWING FACTORS WHERE APPICABLE. NOTE THAT THE FACTORS ARE CUMULATIVE:
   - A. REINFORCING BAR STRENGTH OTHER THAN 60 KSI: $(F_y/60,000)$
   - B. LIGHT WEIGHT CONCRETE: 1.3
   - C. EPOXY COATED BARS: 1.2

| BAR SIZE | TENSION DEVELOPMENT LENGTH (ld) INCHES | |
|---|---|---|
| | 4000 PSI | 5000 PSI |
| #3 | 8 | 7 |
| #4 | 10 | 9 |
| #5 | 12 | 11 |
| #6 | 15 | 13 |
| #7 | 17 | 15 |
| #8 | 19 | 17 |
| #9 | 22 | 20 |
| #10 | 24 | 22 |
| #11 | 27 | 24 |

## 4 HOOKED REINFORCEMENT TENSION DEVELOPMENT LENGTH SCHEDULE

N.T.S.

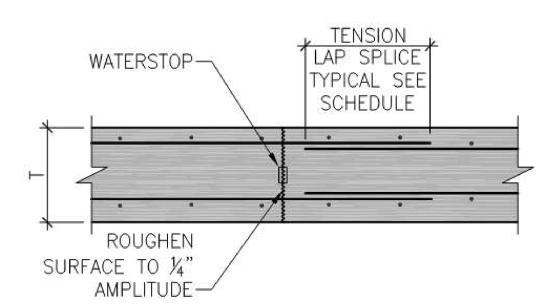


NOTES:
1. CONSTRUCTION JOINTS SHALL BE PLACED AT A VERTICAL CONTROL JOINT. SEE VERTICAL CONTROL JOINT DETAIL.

## 5 VERTICAL CONSTRUCTION JOINT IN WALL

N.T.S.

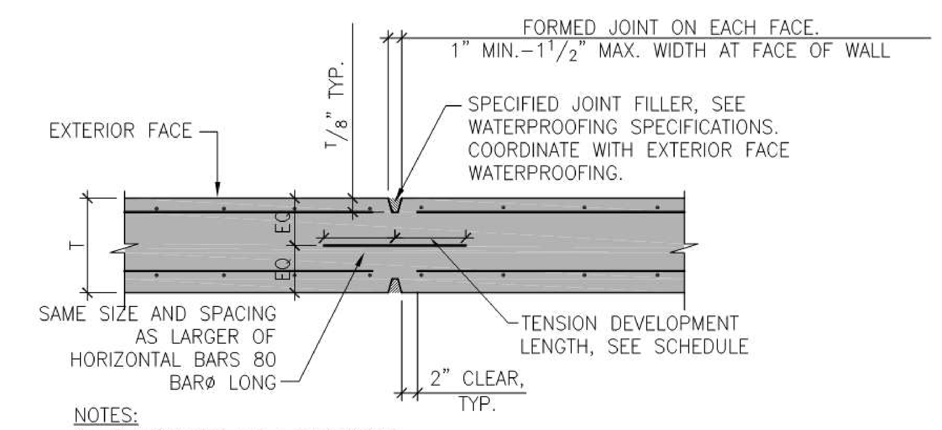


NOTES:
1. T INDICATES WALL THICKNESS.
2. 40' MAXIMUM SPACING BETWEEN CONTROL AND/OR CONSTRUCTION JOINTS. 30' MAXIMUM SPACING AT WALLS WITH ARCHITECTURAL CONCRETE.
3. PROVIDE JOINTS WITHIN 5 FT. OF ALL CORNERS AND/OR INTERSECTIONS.

## 6 VERTICAL CONTROL JOINT IN WALL

N.T.S.

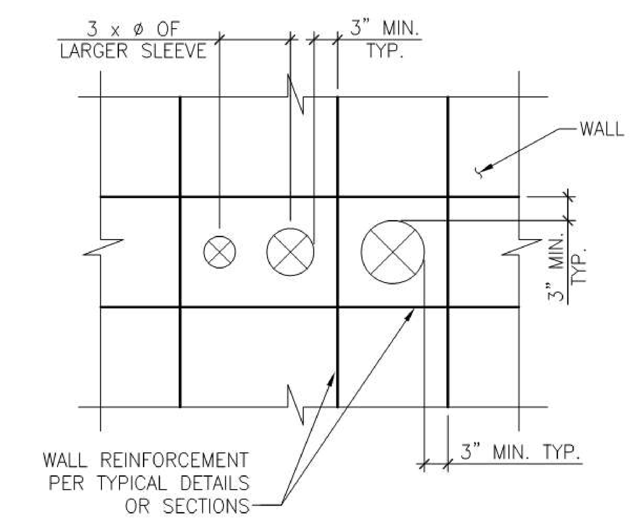


SLEEVE PENETRATIONS THROUGH WALL PLACED WITHOUT NEED FOR DISPLACING REINFORCEMENT

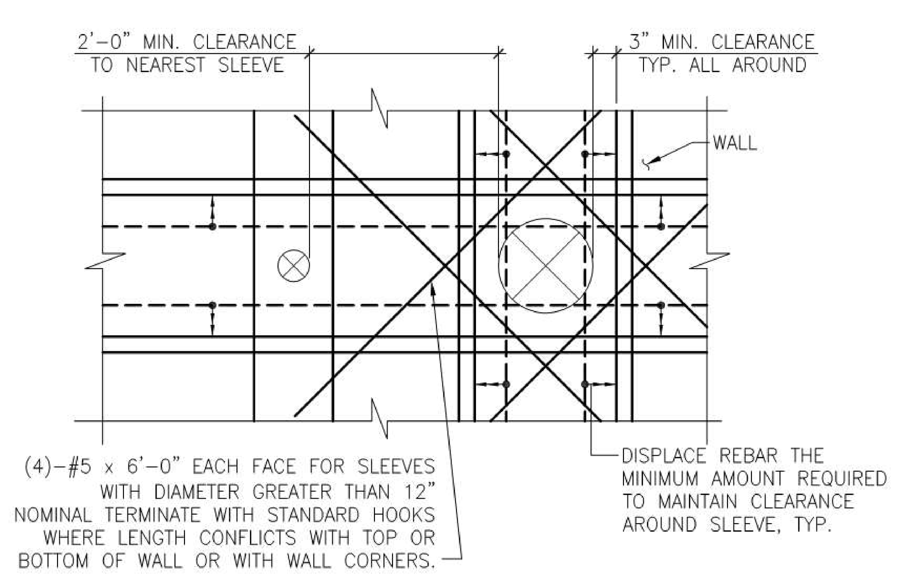


SLEEVE PENETRATIONS THROUGH WALL PLACED WITH NEED FOR DISPLACING REINFORCEMENT CAGE – 3'-0" MAX., SLEEVE DIAMETER.

## 7 TYPICAL REINFORCEMENT AROUND PIPE SLEEVES

N.T.S.

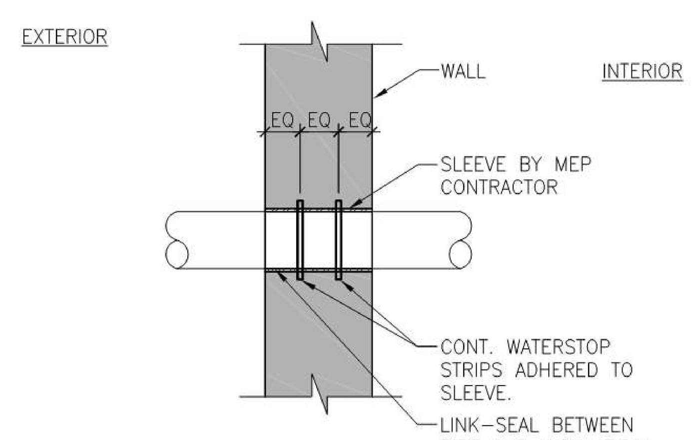


NOTES:
1. REVIEW WITH ARCHITECT AND ENGINEER ALTERNATE SCHEMES FOR WATERPROOFING SLEEVES.
2. COORDINATE SIZE AND LOCATION OF SLEEVE WITH MECHANICAL, ELECTRICAL AND PLUMBING DRAWINGS.

## 8 PIPE SLEEVE DETAIL THROUGH WALL

N.T.S.

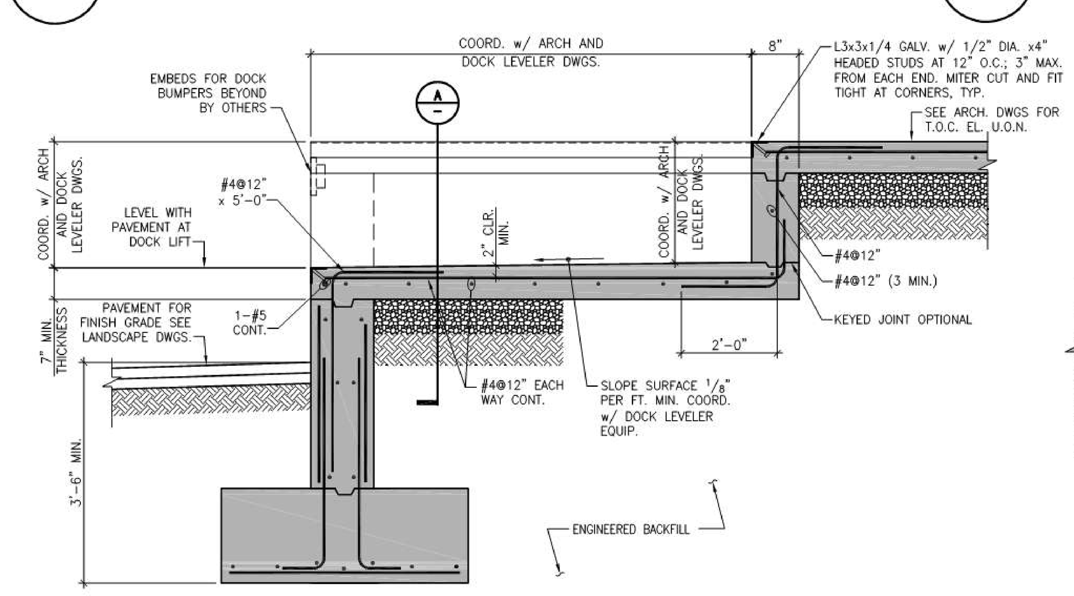


## 9

1/2" = 1'-0"

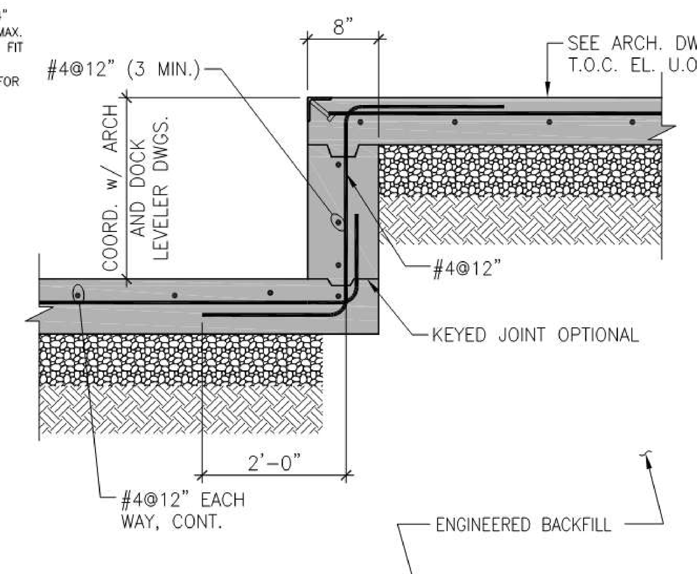


## SECTION A

N.T.S.

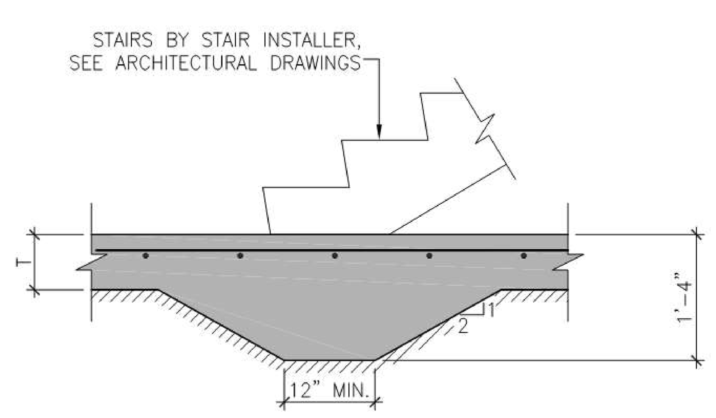


NOTES:
1. [hatch] ON DETAIL INDICATES GENERIC SUBGRADE. REFER TO TYPICAL SLAB-ON-GRADE DETAIL, GENERAL NOTES AND/OR SPECIFICATIONS.
2. $d_b$ = DOWEL BAR DIAMETER.
3. REINFORCEMENT SHOWN GRAPHICALLY. REFER ELSEWHERE FOR SIZE AND SPACING.

## 10 THICKENED SLAB-ON-GRADE AT CMU WALLS AND STAIR LANDINGS ON SLAB-ON-GRADE

N.T.S.

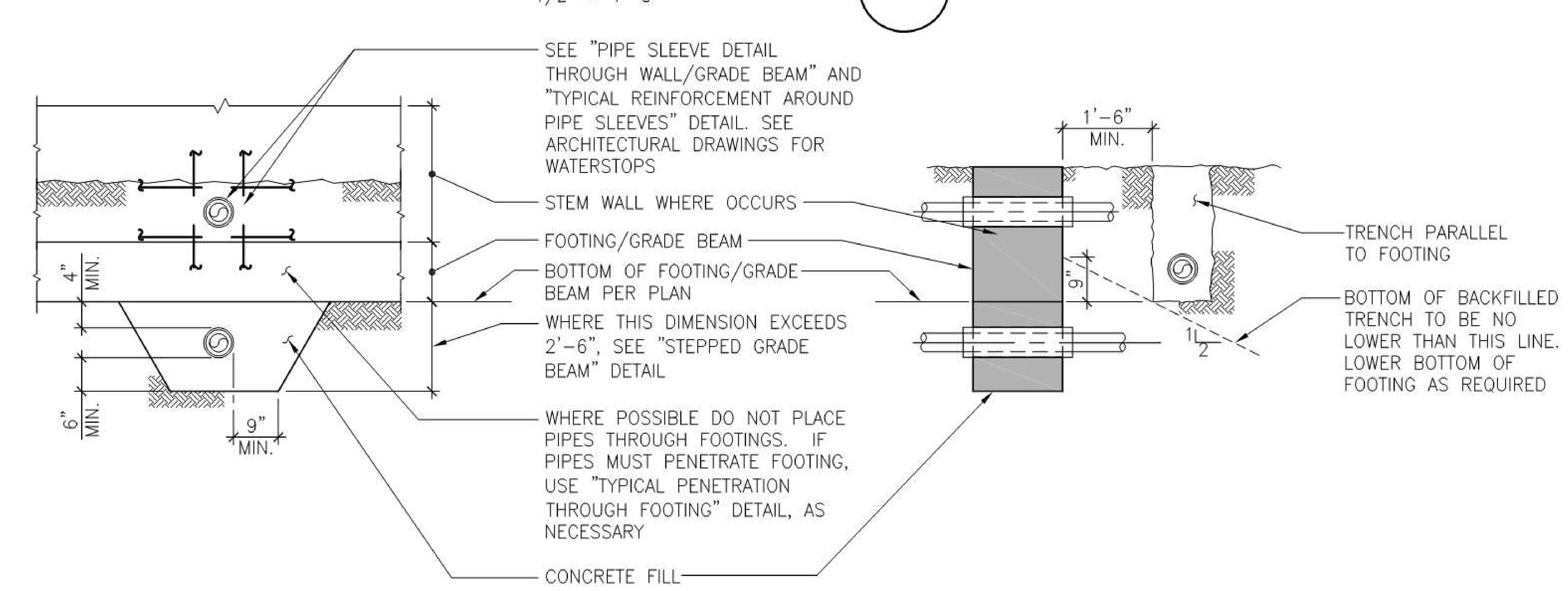


## 11 TYPICAL CONDITIONS FOR PIPES BELOW GRADE

N.T.S.


MPA MARGULIES PERRUZZI ARCHITECTS
308 Congress Street | Boston, MA 02210 | 617.482.3232 | www.mp-architects.com

Design for the way you work.

CLIENT INFORMATION
AS CLOCK TOWER OWNER, LLC c/o SARACEN PROPERTIES

MILL & MAIN RENOVATION PHASE 1
146 MAIN STREET
MAYNARD, MA 01751


CONSULTANT INFORMATION

MEP ENGINEERS
AHA CONSULTING ENGINEERS
24 HARTWELL AVE., 3RD FLOOR
LEXINGTON, MA 02421
781-372-3200

CIVIL ENGINEER
NITSCH ENGINEERING
2 CENTER PLAZA, SUITE 430
BOSTON, MA 02108
617-542-8552

SPECIFICATIONS
KALIN ASSOCIATES
1121 WASHINGTON ST., #2
WEST NEWTON, MA 02465
617-964-5477

HARDWARE CONSULTANT
CAMPBELL-MCCABE, INC.
1 CLOCK TOWER PLACE
MAYNARD, MA 01754
781-899-8822

LANDSCAPE DESIGN
BROWN, RICHARDSON, & ROWE
3 POST OFFICE SQUARE, 3RD FLOOR
BOSTON, MA, 02109
617-542-8552

LIGHTING CONSULTANTS
SLADEN FEINSTEIN INTEG.
295 HUNTINGTON AVE., #305
BOSTON, MA 02115
617-267-9500

STRUCTURAL ENGINEER
SIMPSON GUMPERTZ & HEGER
41 SEYON STREET, BLDG 1, SUITE 500
WALTHAM, MA 02453
781-907-9000

GEOTECHNICAL CONSULTANT
HALEY & ALDRICH, INC.
465 MEDORD STREET, SUITE 2200
BOSTON, MA 02129
617-886-7399


REVISIONS

| NUMBER | DESCRIPTION | DATE |
|---|---|---|

STAMP

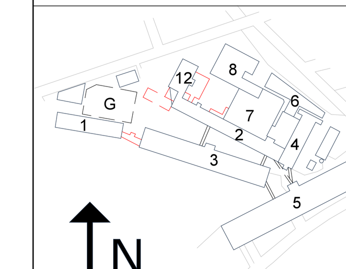


KEY PLAN

DATE..........10/19/2015
SCALE..........
DRAWN BY..........MAT
PROJECT NUMBER.....SAR15A.00
DRAWING TITLE
CONCRETE TYPICAL DETAILS (2 OF 2)

# S-011

DRAWING NUMBER

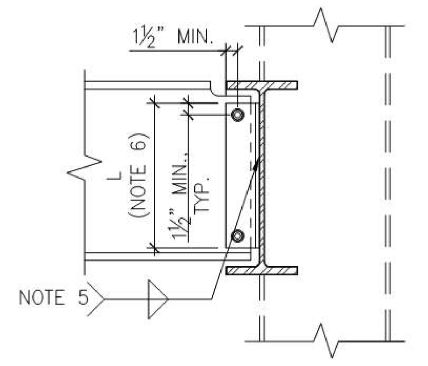


SINGLE PLATE CONNECTION

NOTES:
1. DESIGN MODEL: AISC STEEL CONSTRUCTION MANUAL 13TH EDITION, SECTION 10.
2. TREAT COLUMN FLANGES AND GIRDERS WITH SINGLE PLATE CONNECTIONS ON OPPOSITE SIDES WITHIN 6" AS RIGID ELEMENTS.
3. TREAT ALL OTHER GIRDER WEBS AS FLEXIBLE ELEMENTS.
4. PLATE MATERIAL: ASTM A36 STEEL, MIN.
5. MINIMUM WELD SIZE = ⅝ X PLATE THICKNESS WITH E70XX ELECTRODES.
6. L = GREATER THAN 0.5 X BEAM "T" DIMENSION.
7. MAXIMUM PLATE THICKNESS = BOLT $^{\phi}/_{2}$ +¹⁄₁₆" OR WEB THICKNESS.
8. DO NOT USE AT COLUMN WEBS.

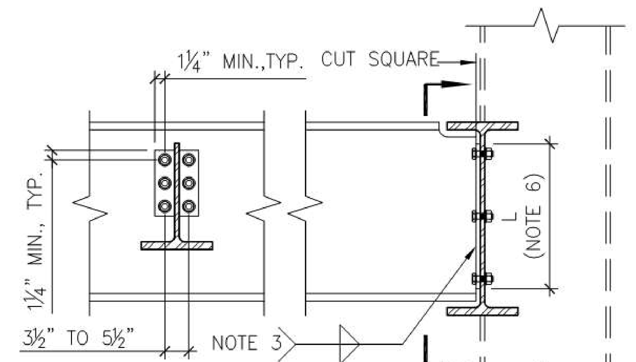


SHEAR END PLATE CONNECTION

NOTES:
1. DETAIL SIMILAR AT COLUMN FLANGE OR COLUMN WEB.
2. END PLATE THICKNESS RANGE: FROM ¼" TO ⅝" INCLUSIVE.
3. DO NOT RETURN WELD ACROSS THICKNESS OF BEAM WEB.
4. END PLATE MATERIAL: ASTM A36, MIN.
5. DO NOT USE ON CAMBERED BEAMS.
6. L = GREATER THAN 0.5 x BEAM "T" DIMENSION.

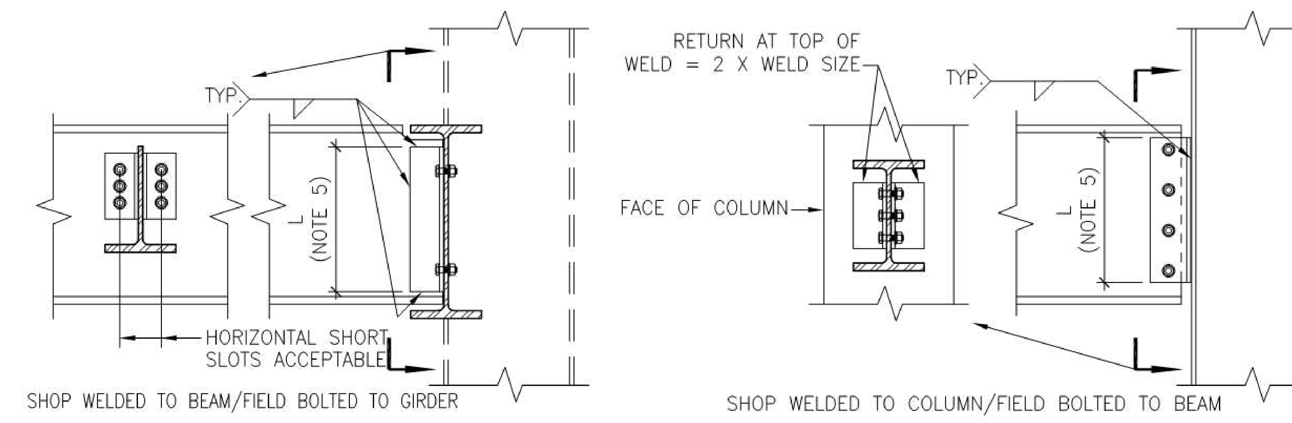


DOUBLE ANGLE CONNECTION TO BEAM OR COLUMN

NOTES:
1. DETAIL SIMILAR AT CONNECTION TO COLUMN FLANGE OR COLUMN WEB.
2. BOLTED – BOLTED ALTERNATES ACCEPTABLE.
3. MAXIMUM ANGLE THICKNESS: ⅝".
4. NEGLECT WELD RETURNS AT TOP OF ANGLES IN STRENGTH CALCULATIONS.
5. L = GREATER THAN 0.5 X BEAM "T" DIMENSION.

GENERAL NOTES:
1. MINIMUM BOLT SIZE IS ¾"ø A325, U.O.N.
2. PRETENSION BOLTS CONNECTING TO COLUMNS, SNUG TIGHTEN ALL OTHER BOLTS.
3. REINFORCE WEBS AS REQUIRED BY COPES, WEB CUTS, ETC.
4. ALTERNATE CONNECTION TYPES, SUCH AS SINGLE ANGLE, TEE, SEATED CONNECTIONS, ETC. MAY BE ACCEPTABLE UNDER CERTAIN CIRCUMSTANCES. REVIEW WITH ENGINEER.
5. DETAIL CONNECTIONS IN CONFORMANCE WITH THE REQUIREMENTS OF "29 CFR PART 1926, SUBPART R – STEEL ERECTION".
6. GRIND COPES FOR GROUP 4 AND 5 SECTIONS PER THE AISC LRFD SPECIFICATION SECTION J1.6.
7. TYPICAL CONNECTION: BOLTED–BOLTED FULL DEPTH DOUBLE ANGLE CONNECTIONS ON SUPPORTING MEMBER WITH ⁵⁄₁₆" THICK ANGLES AND ¾"ø MIN. A325 BOLTS. BOLTED–WELDED ALTERNATE CONNECTION WITH ⁵⁄₁₆" FILLET WELDS ACCEPTABLE. AT CHANNELS AND SKEWED CONNECTION TO COLUMNS, USE FULL DEPTH ⁵⁄₁₆" SINGLE PLATE CONNECTION WITH ⁵⁄₁₆" FILLET WELDS AND ¾"ø A325 BOLTS.

## 1 STANDARD WIDE FLANGE BEAM SHEAR CONNECTIONS

N.T.S.

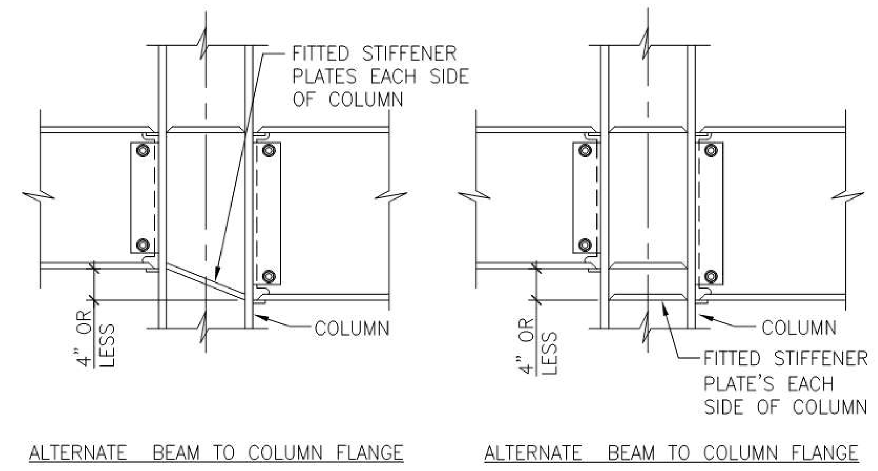


## 2 GRAVITY STRONG AXIS BEAM–TO–COLUMN MOMENT CONNECTION DETAIL

N.T.S.

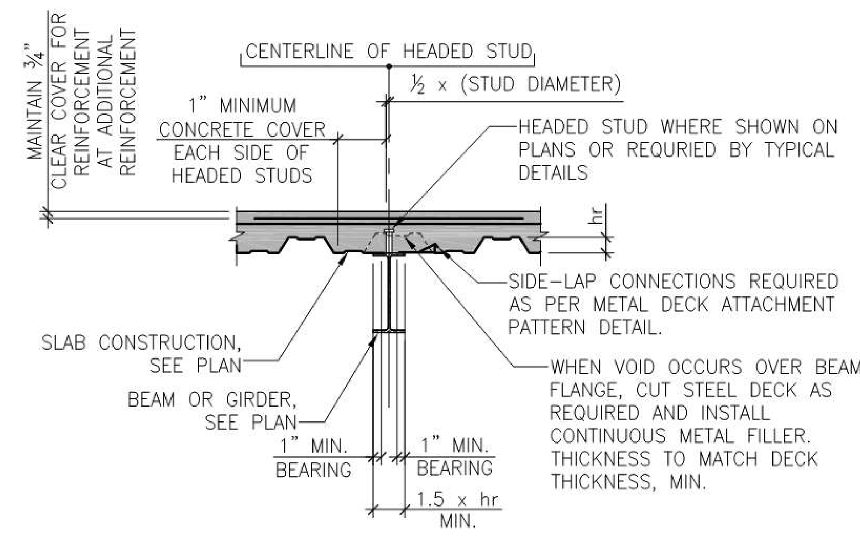


NOTES:
1. DETAIL APPLIES TO SKEWED BEAMS AND GIRDERS AS REQUIRED FOR STUD PLACEMENT PARAMETERS.

## 3 STEEL DECK PARALLEL TO STEEL SUPPORT

N.T.S.

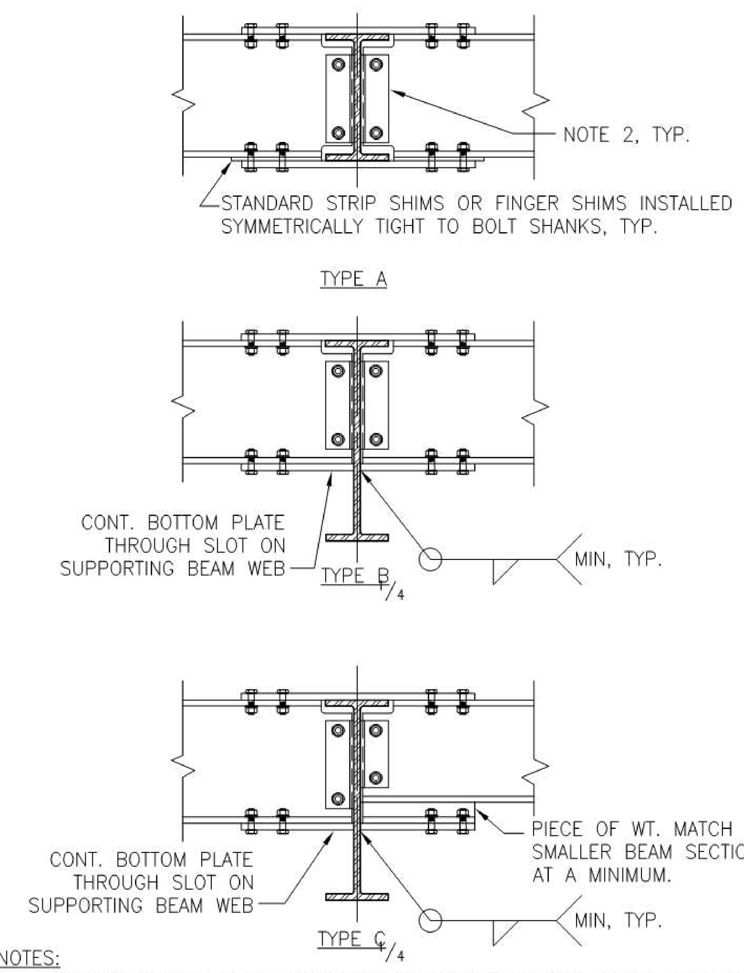


NOTES:
1. PROVIDE FLANGE PLATE THICKNESS WITHIN ¹⁄₁₆" OF CANTILEVER BEAM FLANGE THICKNESS AND 6–BOLT ¾"ø A325 CONNECTION ON EACH END OF FLANGE PLATE. FOR ELEMENTS INDICATED WITH A "TF" ON PLAN, USE 4–BOLT ARRAY AT EACH SIDE OF PLATE.
2. FULL DEPTH DOUBLE ANGLE CONNECTION PER TYPICAL DETAILS .
3. ALL BOLTS ARE SLIP CRITICAL.
4. FIELD WELDED FLANGE PLATE ALTERNATES ACCEPTABLE.
5. DETAIL SHIMS AND/OR FILLERS PER AISC LRFD SPECIFICATION SECTION J6.
6. PROVIDE DECK SUPPORT AS REQUIRED. DECK SUPPORT BY OVERSIZE TOP FLANGE FILLER PLATE IS ACCEPTABLE IF IT HAS A ¼" MIN. THICKNESS AND IT EXTENDS A MINIMUM OF 3" BEYOND THE BEAM FLANGES.
7. PROVIDE DECK SUPPORT ANGLES ON FOUR SIDES OF MOMENT CONNECTION.

## 4 BEAM–TO–BEAM MOMENT CONNECTION

$^{3}/_{4}$" = 1'–0"

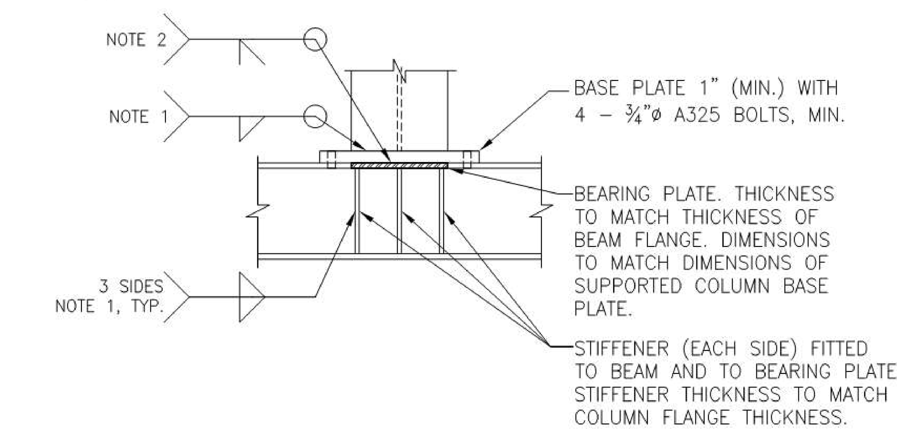


**WIDE FLANGE COLUMN WITH WEB PERPENDICULAR TO BEAM WEB**

(OR HSS COLUMN WITH PERPENDICULAR DIMENSION WIDER THAN BEAM FLANGE)

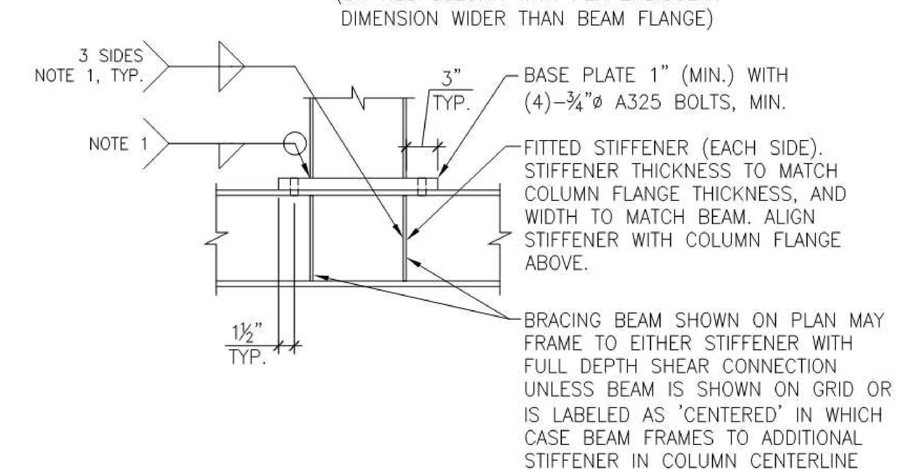


**WIDE FLANGE COLUMN WITH WEB PARALLEL TO BEAM WEB**

(OR HSS COLUMN)

NOTES:
1. MINIMUM WELD SIZE PER MINIMUM SIZE OF FILLET WELD DETAIL. BUT NOT LESS THAN ¼".
2. CJP BETWEEN BEARING PLATE AND SUPPORTING BEAM.
3. FULLY TENSION ALL BOLTS.
4. SLAB CONSTRUCTION NOT SHOWN FOR CLARITY, SEE PLANS.

## 5 COLUMN OVER BEAM DETAIL

N.T.S.

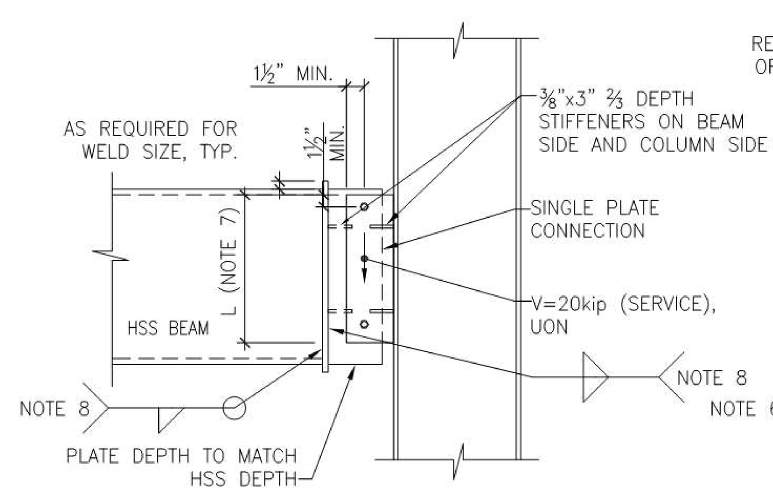


**SINGLE PLATE HSS TO COLUMN CONNECTION**

NOTES:
1. DO NOT USE CONNECTION AT COLUMN WEBS.
2. DESIGN MODEL: AISC STEEL CONSTRUCTION MANUAL 13TH EDITION MANUAL, SECTION 10.
3. TREAT COLUMN FLANGES AND GIRDERS WITH SINGLE PLATE CONNECTIONS ON OPPOSITE SIDES WITHIN 6" AS RIGID ELEMENTS.
4. TREAT ALL OTHER GIRDER WEBS AS FLEXIBLE ELEMENTS.
5. PLATE MATERIAL: ASTM A36 STEEL.
6. MINIMUM WELD SIZE = $^{3}/_{4}$ X PLATE THICKNESS WITH E70XX ELECTRODES.
7. L = GREATER THAN 0.5XHSS NOMINAL DEPTH.
8. SIZE WELD AS REQUIRED TO RESIST THE SHEAR FORCE APPLIED AT THE BOLT LINE.

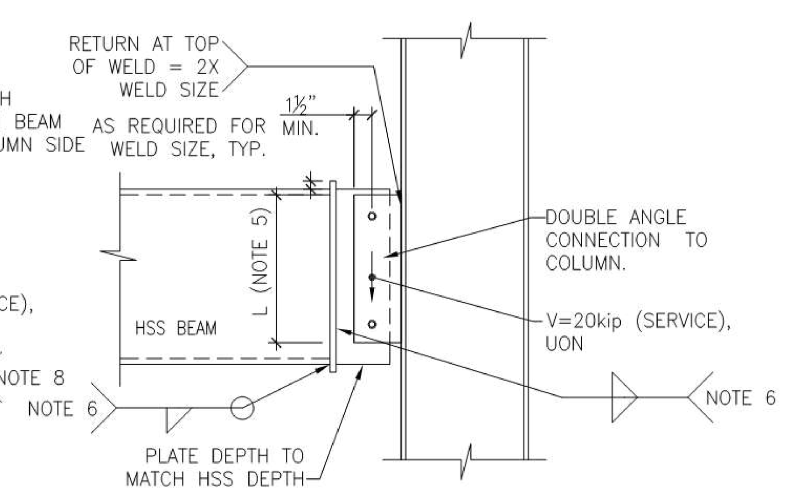


**DOUBLE ANGLE HSS TO COLUMN OR BEAM CONNECTION**

NOTES:
1. DETAIL SIMILAR AT CONNECTION TO COLUMN FLANGE, COLUMN WEB, ON OPPOSITE SIDES WITHIN 6" AS RIGID ELEMENTS.
2. BOLTED–BOLTED ALTERNATES ACCEPTABLE.
3. MAXIMUM ANGLE THICKNESS: ⁵⁄₁₆".
4. NEGLECT WELD RETURNS AT TOP OF ANGLES IN STRENGTH CALCULATIONS.
5. L = GREATER THAN 0.5XHSS NOMINAL DEPTH.
6. SIZE WELD AS REQUIRED TO RESIST THE SHEAR FORCE APPLIED AT THE BOLT LINE.

GENERAL HSS CONNECTION NOTES:
1. MINIMUM BOLT SIZE IS ¾"ø A325, UON.
2. PRETENSION ALL BOLTS.
3. SEE DETAILS AND SECTIONS FOR BEAMS REQUIRING FULL DEPTH SHEAR CONNECTIONS.
4. DETAIL CONNECTIONS IN CONFORMANCE WITH THE REQUIREMENTS OF "29 CFR PART 1926, SUBPART R–STEEL ERECTION".
5. DO NOT USE WHERE HORIZONTAL OUT–OF–PLANE SHEAR REACTIONS ARE INDICATED.

## 6 STANDARD HSS BEAM SHEAR CONNECTIONS

N.T.S.

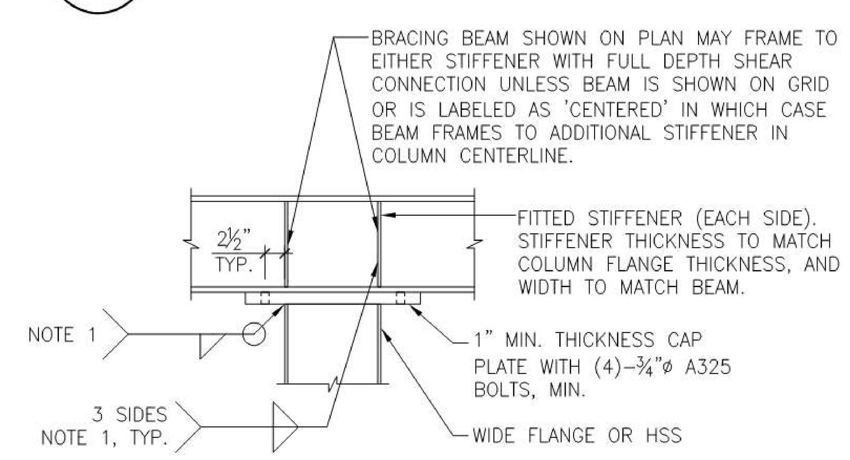


NOTES:
1. MINIMUM WELD SIZE PER MINIMUM SIZE OF FILLET WELD DETAIL, BUT NOT LESS THAN ¼"
2. CJP BETWEEN BEARING PLATE AND SUPPORTED BEAM.
3. FULLY TENSION ALL BOLTS.

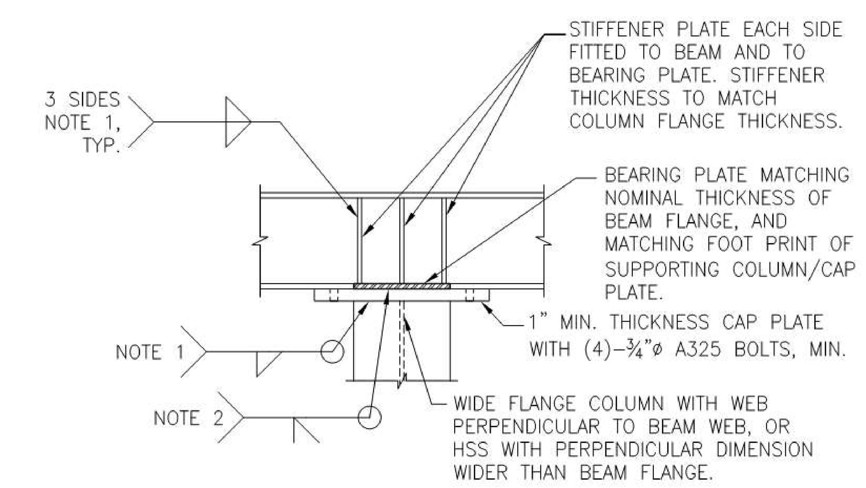


## 7 BEAM OVER COLUMN DETAIL

N.T.S.

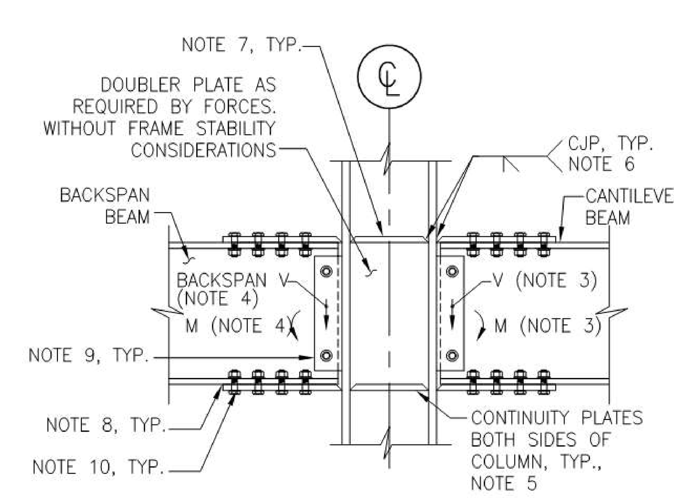


NOTES:
1. DETAIL IS SIMILAR FOR COLUMN ON WEAK AXIS.
2. CONNECTION FORCES ARE THE GREATER OF THOSE SHOWN ON PLAN AND ON NOTES 3 AND 4.
3. CANTILEVER CONNECTION FORCES:
   M = 80% OF FLEXURAL STRENGTH OF THE CANTILEVER BEAM DEFINED AS $F_Y$ TIMES THE PLASTIC MODULUS OF THE SECTION
   V = 50% OF THE SHEAR STRENGTH OF THE CANTILEVER BEAM DEFINED AS 0.6 X $F_Y$ X D X $T_W$
4. BACKSPAN CONNECTION FORCES:
   M = SAME AS CANTILEVER SPAN
   V = PER "BEAM SHEAR REACTION TABLE AND CONNECTION NOTES"
5. MATCH CONTINUITY PLATE WIDTH AND THICKNESS WITH CONTACT AREA OF CONNECTION FLANGE PLATES. SLOPE BOTTOM PLATES FOR UP TO 4" DIFFERENCE IN BEAM NOMINAL DEPTHS, USE TWO BOTTOM CONTINUITY PLATES FOR GREATER DIFFERENCE IN DEPTH.
6. CONNECTION SHOWN AS A SINGLE BEVEL EDGE PREPARATION, DOUBLE BEVEL EDGE PREPARATION AT FABRICATOR'S DISCRETION.
7. PJP OR FILLET WELD AS REQUIRED TO TRANSFER FLANGE PLATE FORCES TO COLUMN WEB.
8. FULL CONTACT FILLER PLATES AS REQUIRED.
9. SHEAR CONNECTION ON FULL DEPTH SINGLE PLATE AT CANTILEVER END AND ON CONNECTION DESIGNED PER THE STANDARD WIDE FLANGE BEAM SHEAR CONNECTIONS TYPICAL DETAIL AT THE BACKSPAN END.
10. BOLTED MOMENT CONNECTION AT CANTILEVER AND BACKSPAN EXCEPT WHERE BACKSPAN IS MOMENT CONNECTED AT BOTH ENDS AS PART OF A MOMENT FRAME.
11. ALL BOLTS DESIGNED AS PRETENSIONED, $^{7}/_{8}$"ø A325 MIN. BOLTS.

## 8 ALTERNATIVE GRAVITY CANTILEVER WIDE FLANGE BEAM CONNECTION

N.T.S.


MPA MARGULIES PERRUZZI ARCHITECTS
308 Congress Street | Boston, MA 02210 | 617.482.3232 | www.mp-architects.com
Design for the way you work.


CLIENT INFORMATION
AS CLOCK TOWER OWNER, LLC c/o SARACEN PROPERTIES

MILL & MAIN RENOVATION PHASE 1
146 MAIN STREET
MAYNARD, MA 01751


CONSULTANT INFORMATION

MEP ENGINEERS
AHA CONSULTING ENGINEERS
24 HARTWELL AVE., 3RD FLOOR
LEXINGTON, MA 02421
781-372-3200

CIVIL ENGINEER
NITSCH ENGINEERING
2 CENTER PLAZA, SUITE 430
BOSTON, MA 02108
617-542-8552

SPECIFICATIONS
KALIN ASSOCIATES
1121 WASHINGTON ST., #2
WEST NEWTON, MA 02465
617-964-5477

HARDWARE CONSULTANT
CAMPBELL-MCCABE, INC.
1 CLOCK TOWER PLACE
MAYNARD, MA 01754
781-899-8822

LANDSCAPE DESIGN
BROWN, RICHARDSON, & ROWE
3 POST OFFICE SQUARE, 3RD FLOOR
BOSTON, MA, 02109
617-542-8552

LIGHTING CONSULTANTS
SLADEN FEINSTEIN INTEG.
295 HUNTINGTON AVE., #305
BOSTON, MA 02115
617-267-9500

STRUCTURAL ENGINEER
SIMPSON GUMPERTZ & HEGER
41 SEYON STREET, BLDG 1, SUITE 500
WALTHAM, MA 02453
781-907-9000

GEOTECHNICAL CONSULTANT
HALEY & ALDRICH, INC.
465 MEDORD STREET, SUITE 2200
BOSTON, MA 02129
617-886-7399


REVISIONS

| NUMBER | DESCRIPTION | DATE |
|---|---|---|

STAMP

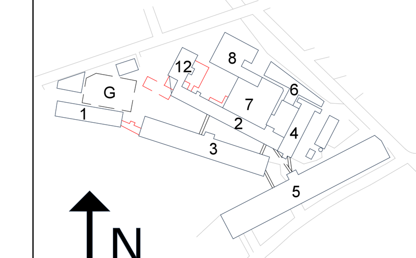


KEY PLAN

DATE..........................10/19/2015
SCALE..........................
DRAWN BY..................MAT
PROJECT NUMBER.....SAR15A.00

DRAWING TITLE
STEEL TYPICAL DETAILS (1 OF 2)

# S-020

DRAWING NUMBER

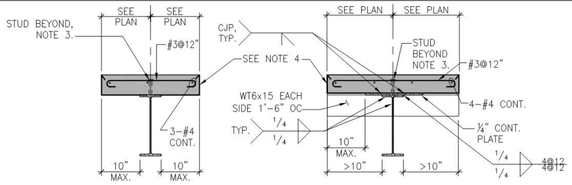


NOTES:
1. DETAIL DOES NOT APPLY FOR ECCENTRIC MASONRY LOADS ON SLAB OR MEP ATTACHMENTS TO EDGE OF SLAB.
2. DEVELOP LONGITUDINAL BARS INTO SLAB BEYOND SLAB EDGE WITH EXTENSION OR STANDARD HOOK IF SPACE DOES NOT ALLOW FOR EXTENSION.
3. PLACE STUDS AS SHOWN ON PLAN, BUT NOT LESS THAN 1 STUD AT 12" OC
4. SHEET METAL POURSTOP BY DECK SUPPLIER. USE SDI CRITERIA (SDI PUBLICATION #31) FOR THICKNESS, 14 GA. MINIMUM.

## 1 FLOOR OPENING ON BOTH SIDES OF BEAM

N.T.S.

| MINIMUM POUR STOP GAUGE | | | | | | | | | | | | | |
|---|---|---|---|---|---|---|---|---|---|---|---|---|---|
| SLAB DEPTH (INCHES) | OVERHANG (INCHES) | | | | | | | | | | | | |
| | 0 | 1 | 2 | 3 | 4 | 5 | 6 | 7 | 8 | 9 | 10 | 11 | 12 |
| 6.50 | 16 | 16 | 16 | 16 | 16 | 14 | 14 | 12 | 12 | 12 | 10 | 10 | |
| 7.50 | 16 | 14 | 14 | 12 | 12 | 12 | 12 | 10 | 10 | 10 | | | |

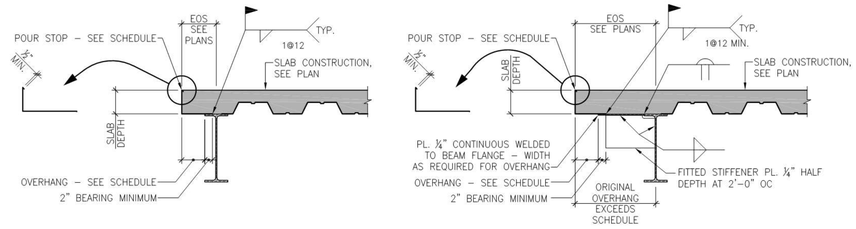


TYPICAL SLAB EDGE

LARGE OVERHANG SLAB EDGE

NOTES:
1. UON, PLACE GALVANIZED SHEET METAL POUR STOPS. POUR STOPS SHOWN ARE A MINIMUM.

## 2 COMPOSITE DECK SLAB EDGE DETAIL

N.T.S.

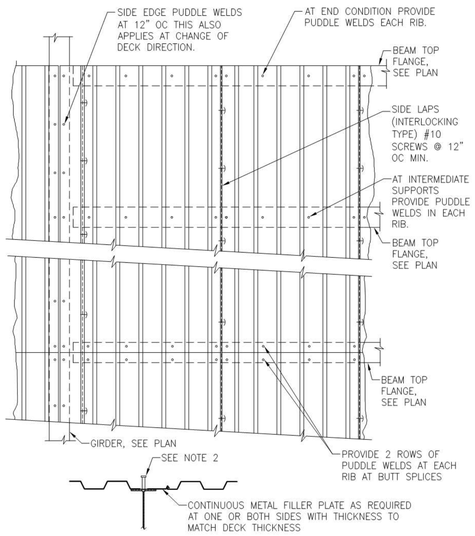


NOTES:
1. PUDDLE WELDS TO BE ⅜"ø MIN.
2. WELDED HEADED STUDS MAY REPLACE PUDDLE WELDS.
3. DECK ENDS ARE TO BE BUTT SPLICED. LAPPED DECK ENDS PROHIBITED.

## 3 FASTENING PATTERN FOR 3" COMPOSITE METAL DECK

N.T.S.

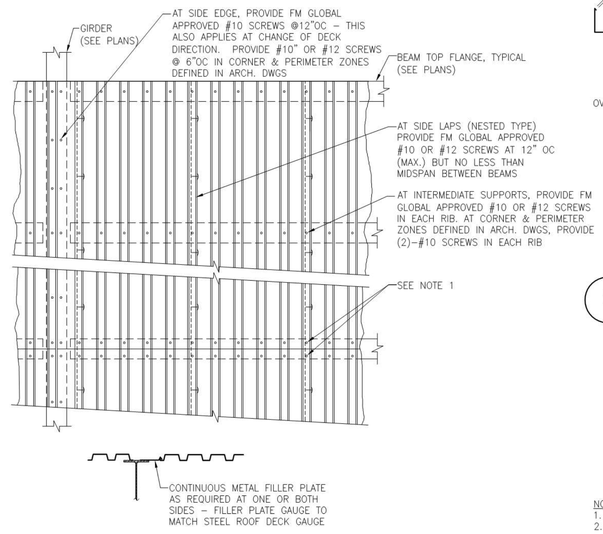


NOTES:
1. DECK ENDS ARE TO BE BUTT SPLICED. LAPPED DECK ENDS ARE PROHIBITED.

## 4 FASTENING PATTERN FOR $1^1/_2$" STEEL ROOF DECK

NTS

| BEAM SHEAR REACTION TABLE | | |
|---|---|---|
| BEAM SIZE | REACTION (KIPS) | MINIMUM NUMBER OF BOLT ROWS |
| W8 | 15 | 2 |
| HSS12x10 | 25 | 3 |
| HSS12x12 | 25 | 3 |
| W16, W18 | 30 | 3 |

NOTES:
1. SHEAR VALUES ON PLAN SUPERSEDE TABLE VALUES.
2. SHEAR VALUES ARE SERVICE LOADS. USE 1.5 LOAD FACTOR FOR LRFD CONVERSIONS.
3. SEE PLANS FOR BEAMS WITH AXIAL FORCES.
4. SEE DETAILS AND SECTIONS FOR BEAMS REQUIRING FULL DEPTH SHEAR CONNECTIONS.
5. MINIMUM BOLT DIAMETER: ¾"
6. DESIGN CONNECTIONS FOR AXIAL TENSILE STRENGTH PER SECTION 1614.3.2.2 OF THE INTERNATIONAL BUILDING 2009.

## 5 BEAM REACTION TABLE AND NOTES

NTS

| MINIMUM SIZE OF FILLET WELDS TABLE, UON | |
|---|---|
| MATERIAL THICKNESS OF THICKER PART JOINED (IN.) | MINIMUM SIZE OF FILLET WELD[a] (IN.) |
| TO ¼ INCLUSIVE | ⅛ |
| OVER ¼ TO ½ | 3/16 |
| OVER ½ TO ¾ | ¼ |
| OVER ¾ | 5/16 |
| [a] LEG DIMENSION OF FILLET WELDS. SINGLE–PASS WELDS MUST BE USED. | |

## 6 WELD TABLE

N.T.S.

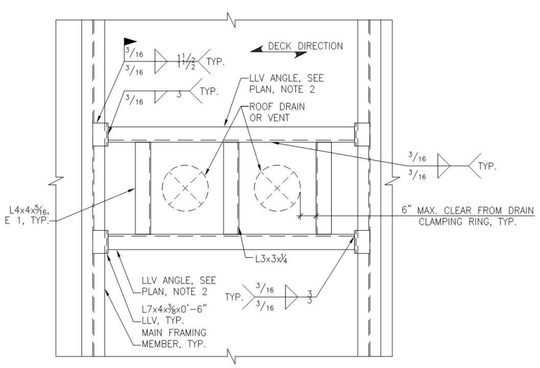


NOTES:
1. OMIT WHEN DRAIN IS LESS THAN 1'–6" CLEAR FROM A MAIN FRAMING MEMBER FLANGE EDGE.
2. OMIT ANGLE WHEN DRAIN IS LESS THAN 1'–0" CLEAR FROM A MAIN FRAMING MEMBER FLANGE EDGE, CONNECT SHORT ANGLES TO MAIN FRAMING MEMBER WITH L6x4x5/16 WITH SAME WELDS SHOWN FOR L7x4 ANGLE SUPPORT.
3. TOP OF STEEL ELEVATION TO MATCH MAIN FRAMING MEMBER ELEVATIONS EXCEPT FOR L7x4 CONNECTIONS.
4. REFER TO TYPICAL DETAILTS FOR SUPPORT AT CORNER CONDITION.

## 7 ROOF DRAIN OR VENT SUBFRAMING DETAIL

N.T.S.

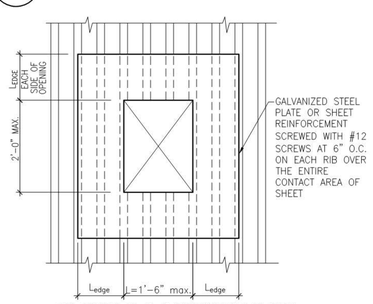


FOR OPENING TO 1'–6" PERPENDICULAR TO DECK

NOTES:
1. NO REINFORCEMENT NEEDED WHERE "L" IS 6 INCHES OR LESS.

| PARAMETERS FOR DECK CUT REINFORCEMENT POUR | | | |
|---|---|---|---|
| DEPTH OF DECK | DECK GAUGE | REINFORCING SHEET THICKNESS | MAX. CLEAR SPAN OF DECK |
| $1^1/_2$" | 20 | 13 GA. | 5'–0" |
| | 18 | 12 GA. | 6'–0" |
| | 16 | 12 GA. | 7'–0" |
| 3" | 20 | 12 GA. | 7'–0" |
| | 18 | 1/8" or 10 GA. | 8'–0" |
| | 16 | 1/8" or 10 GA. | 9'–0" |

NOTES:
1. $L_{EDGE}$ = 1'–0" MIN.
2. DETAIL DOES NOT APPLY TO OPENINGS SHOWN ON PLAN WITH STEEL SUBFRAMING.
3. FOR OPENINGS CUT IN THE FIELD, NOT SHOWN ON PLAN, AND EXCEEDING THE MAXIMUM SPAN LIMITS, ADD SUBRAMING PER TYPICAL DETAILS.
4. DETAIL APPLIES TO OPENINGS SPACED NO CLOSER THAN 5'–0" CLEAR IN DIRECTION TRANSVERSE TO DECK RIBS AND NO CLOSER THAN 10'–0" CLEAR IN DIRECTION PARALLEL TO RIBS.
5. REVIEW WITH ENGINEER SPECIFIC CONDITIONS THAT MIGHT ALLOW MODIFICATIONS TO THE SPECIFIED PARAMETERS OF THE DETAIL.

## 8 ROOF DECK OPENING REINFORCEMENT

N.T.S.

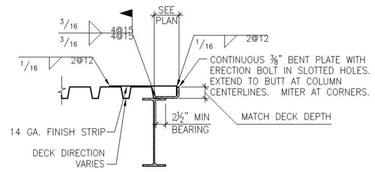


## 9 ROOF DECK EDGE SUPPORT

N.T.S.

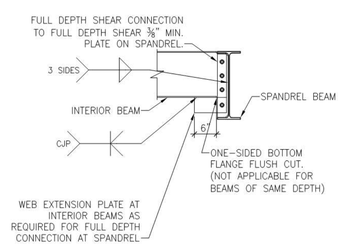


## 10 BEAM FRAMING TO SPANDREL BEAM CONNECTION

N.T.S.


MPA MARGULIES PERRUZZI ARCHITECTS
308 Congress Street | Boston, MA 02210 | 617.402.3232 | www.mp-architects.com
Design for the way you work.


CLIENT INFORMATION
AS CLOCK TOWER OWNER, LLC c/o SARACEN PROPERTIES
MILL & MAIN RENOVATION PHASE 1
146 MAIN STREET
MAYNARD, MA 01751

CONSULTANT INFORMATION

MEP ENGINEERS
AHA CONSULTING ENGINEERS
2 CLARKWOOD LANE, 2ND FLOOR
LEXINGTON, MA 02421
781-372-3200

HARDWARE CONSULTANT
CAMPBELL-MCCABE, INC.
1 CLOCK TOWER PLACE
MAYNARD, MA 01754
781-899-8822

STRUCTURAL ENGINEER
SIMPSON GUMPERTZ & HEGER
41 SEYON STREET, BLDG 1, SUITE 500
WALTHAM, MA 02453
781-907-9000

CIVIL ENGINEER
NITSCH ENGINEERING
2 CENTRAL SQUARE, SUITE 425
BOSTON, MA 02108
617-542-8532

LANDSCAPE DESIGN
BROWN, RICHARDSON, & ROWE
3 POST OFFICE SQUARE, 3RD FLOOR
BOSTON, MA 02109
617-542-8652

GEOTECHNICAL CONSULTANT
HALEY & ALDRICH, INC.
465 MEDFORD STREET, SUITE 2200
BOSTON, MA 02129
617-886-7900

SPECIFICATIONS
KALIN ASSOCIATES
1721 WASHINGTON ST., #2
NEWTONVILLE, MA 02460
617-964-5477

LIGHTING CONSULTANTS
SLADEN FEINSTEIN INTEG.
295 HUNTINGTON AVE., #305
BOSTON, MA 02115
617-267-9500

REVISIONS

| NUMBER | DESCRIPTION | DATE |
|---|---|---|

STAMP

KEY PLAN

DATE.....10/19/2015
SCALE.....
DRAWN BY.....MAT
PROJECT NUMBER.....SAR15A.00

DRAWING TITLE
STEEL TYPICAL DETAILS (2 OF 2)

S-021
DRAWING NUMBER

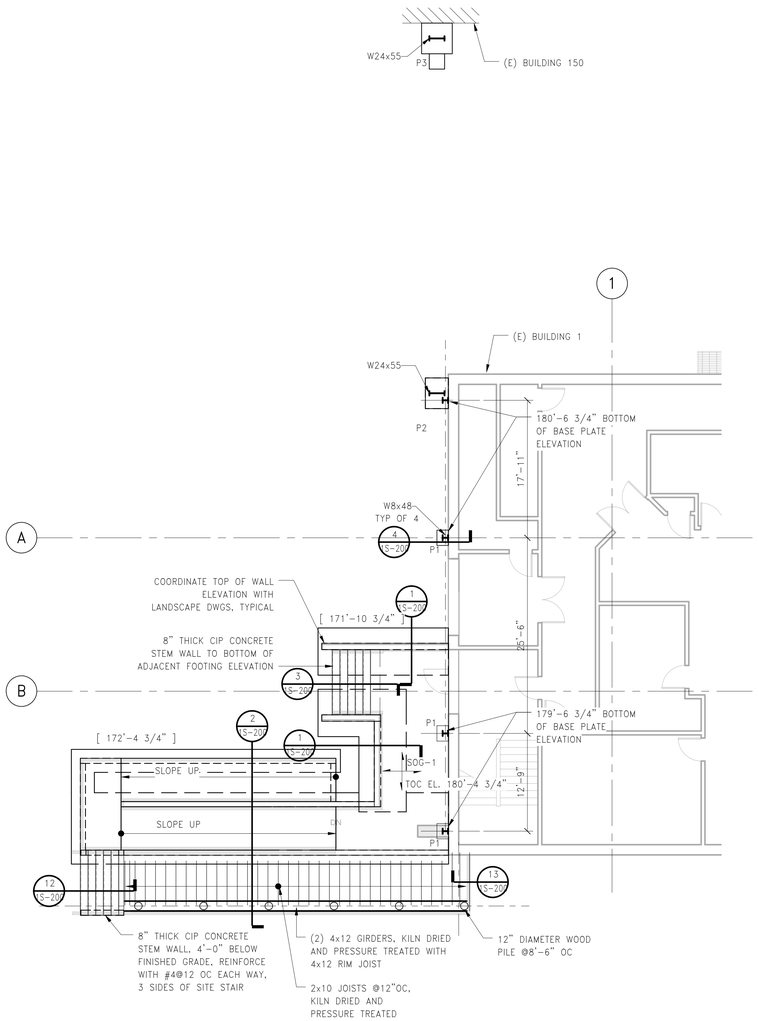


LEVEL 1 FRAMING PLAN

1/8" = 1'-0"

SLAB NOTE SOG-1

5" MIN. NORMAL WEIGHT CONCRETE SLAB-ON-GRADE REINFORCED WITH #4@15" OC EACH DIRECTION. PLACE ON 6" CRUSHED STONE SUBBASE ON COMPACTED SUBGRADE. SAW CUT CONTROL JOINTS AT 8'-0"OC MAX SPACING AND AT RE-ENTRANT CORNERS.

PLAN NOTES:

PN1. SEE PLAN FOR TOP OF CONCRETE ELEVATION.

PN2. [X'-X"] INDICATES BOTTOM OF FOOTING ELEVATION.

PN3. SAW-CUT CONTROL JOINTS IN SLAB-ON-GRADE AT ALL COLUMN CENTERLINES AND AT MID-BAYS. RE-ENTRANT CORNERS ARE PROHIBITED.

PN4. GEOTECHNICAL ENGINEER MUST APPROVE ALL FOOTING BASES PRIOR TO CONCRETE PLACEMENT.

PN5. CONSULT ENGINEER OF RECORD (EOR) IF FIELD CONDITIONS REQUIRE ELEVATION CHANGES IN EXCESS OF 1'-0".


MPA MARGULIES PERRUZZI ARCHITECTS
308 Congress Street | Boston, MA 02210 | 617.482.3232 | www.mp-architects.com
Design for the way you work.


CLIENT INFORMATION

AS CLOCK TOWER OWNER, LLC c/o SARACEN PROPERTIES

MILL & MAIN RENOVATION PHASE 1
146 MAIN STREET
MAYNARD, MA 01754

CONSULTANT INFORMATION

MEP ENGINEERS
AHA CONSULTING ENGINEERS
24 HARTWELL AVE., 3RD FLOOR
LEXINGTON, MA 02421
781-372-3200

HARDWARE CONSULTANT
CAMPBELL-MCCABE, INC.
1 CLOCK TOWER PLACE
MAYNARD, MA 01754
781-899-8822

STRUCTURAL ENGINEER
SIMPSON GUMPERTZ & HEGER
41 SEYON STREET, BLDG 1, SUITE 500
WALTHAM, MA 02453
781-907-9000

CIVIL ENGINEER
NITSCH ENGINEERING
2 CENTER PLAZA, SUITE 430
BOSTON, MA 02108
617-338-0063

LANDSCAPE DESIGN
BROWN, RICHARDSON, & ROWE
3 POST OFFICE SQUARE, 3RD FLOOR
BOSTON, MA 02109
617-542-8552

GEOTECHNICAL CONSULTANT
HALEY & ALDRICH, INC.
465 MEDFORD STREET, SUITE 2200
BOSTON, MA 02129
617-886-7399

SPECIFICATIONS
KALIN ASSOCIATES
1121 WASHINGTON ST., #2
WEST NEWTON, MA 02465
617-964-5477

LIGHTING CONSULTANTS
SLADEN FEINSTEIN INTEG.
295 HUNTINGTON AVE., #305
BOSTON, MA 02115
617-267-9500

REVISIONS

| NUMBER | DESCRIPTION | DATE |
|---|---|---|

STAMP

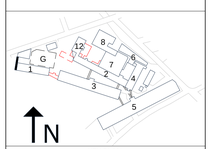


KEY PLAN

DATE.....10/19/2015
SCALE..... 1/8" = 1'-0"
DRAWN BY.....CDC
PROJECT NUMBER.....SAR15A.00
DRAWING TITLE
LEVEL1 FRAMING PLAN

1S-100
DRAWING NUMBER

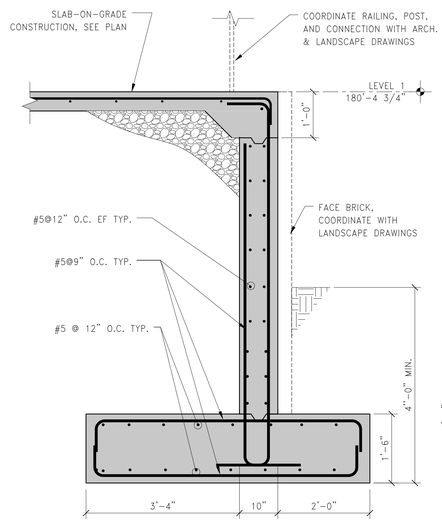


1 SECTION
3/4" = 1'-0"

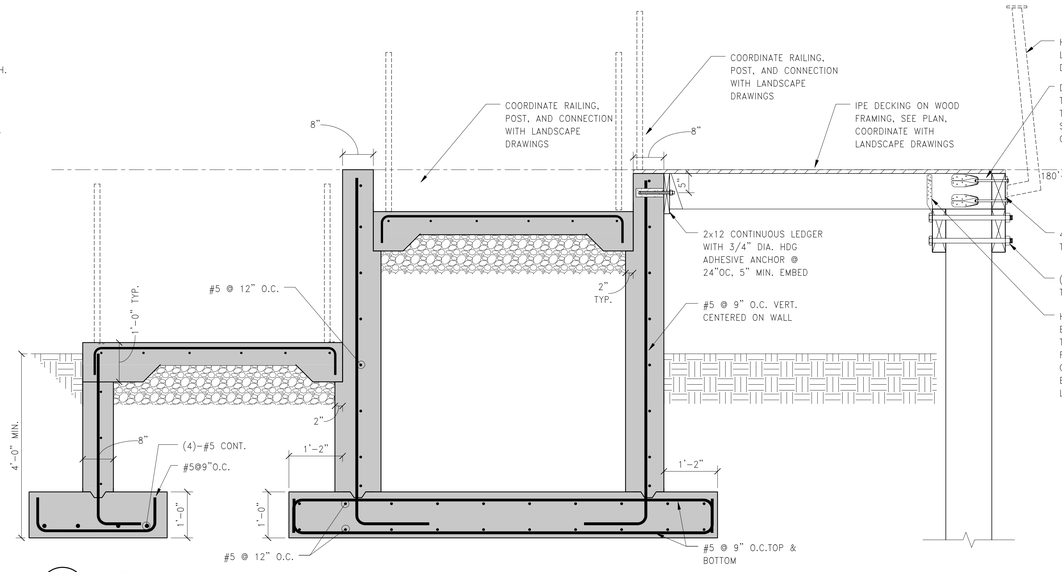


2 SECTION
3/4" = 1'-0"

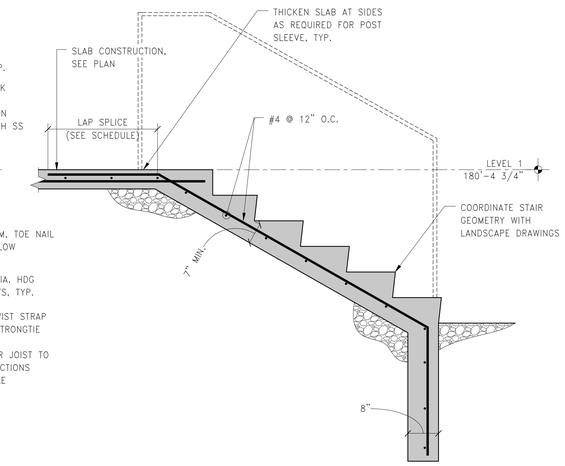


3 SECTION
3/4" = 1'-0"

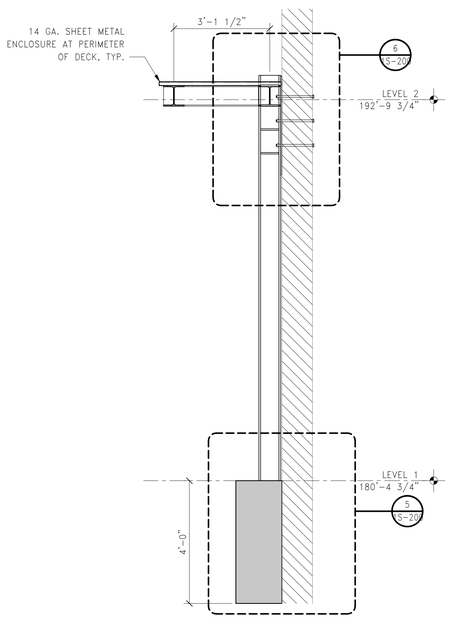


NOTE: ALL STEEL AND CONNECTORS HOT-DIP GALVANIZED

4 SECTION
1/2" = 1'-0"

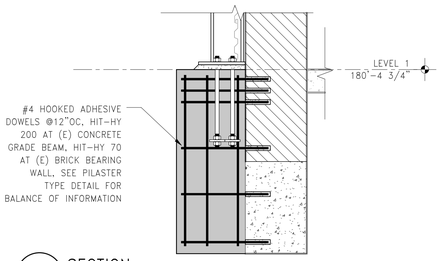


5 SECTION
3/4" = 1'-0"

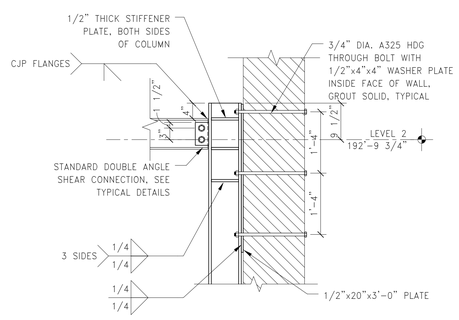


NOTE: METAL DECK NOT SHOWN FOR CLARITY

6 SECTION
3/4" = 1'-0"

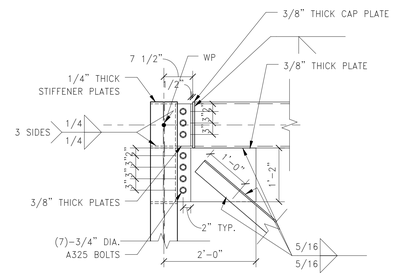


7 TOP CHORD CONNECTION
3/4" = 1'-0"

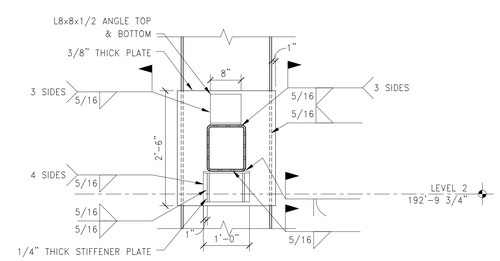


8 BOTTOM CHORD CONNECTION
3/4" = 1'-0"

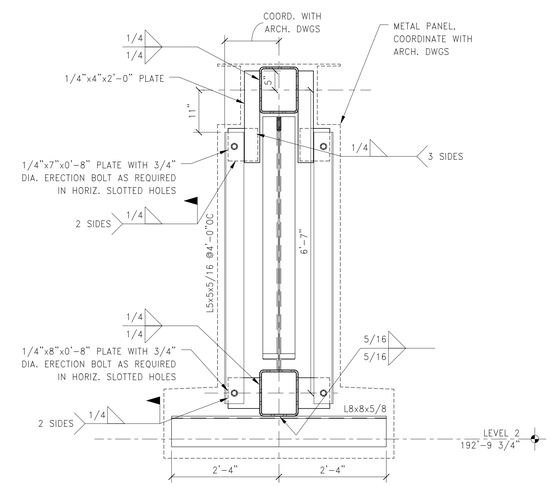


9 SECTION
3/4" = 1'-0"

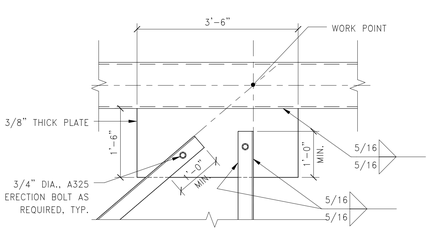


10 TYPICAL TRUSS CONNECTION
3/4" = 1'-0"

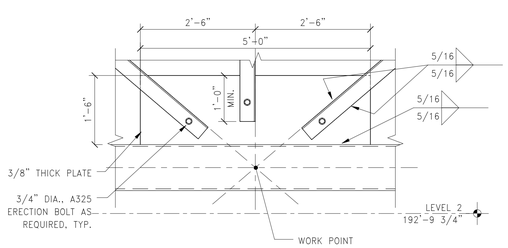


11 TYPICAL TRUSS CONNECTION
3/4" = 1'-0"

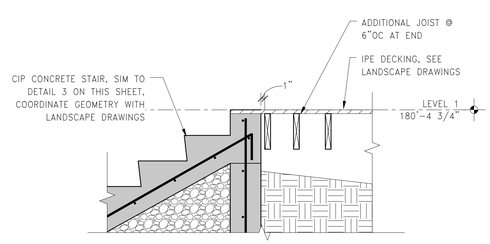


12 SECTION
3/4" = 1'-0"

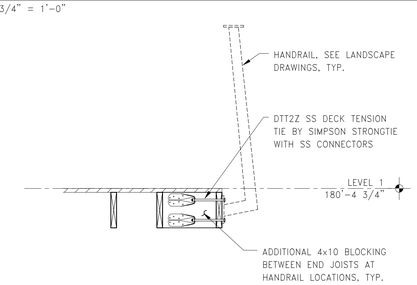


13 SECTION
3/4" = 1'-0"


MPA MARGULIES PERRUZZI ARCHITECTS
308 Congress Street | Boston, MA 02210 | 617.482.3232 | www.mp-architects.com
Design for the way you work.


CLIENT INFORMATION
AS CLOCK TOWER OWNER, LLC c/o SARACEN PROPERTIES

MILL & MAIN RENOVATION PHASE 1
146 MAIN STREET
MAYNARD, MA 01754

CONSULTANT INFORMATION

MEP ENGINEERS
AHA CONSULTING ENGINEERS
74 MASSACHUSETTS AVE, 2ND FLOOR
LEXINGTON, MA 02421
781-372-3200

CIVIL ENGINEER
NITSCH ENGINEERING
2 CENTRAL SQUARE, SUITE 400
BOSTON, MA 02108
617-338-0063

HARDWARE CONSULTANT
CAMPBELL-MCCABE, INC.
1 CLOCK TOWER PLACE
MAYNARD, MA 01754
781-899-8822

LANDSCAPE DESIGN
BROWN, RICHARDSON, & ROWE
3 POST OFFICE SQUARE, 3RD FLOOR
BOSTON, MA 02109
617-542-8652

STRUCTURAL ENGINEER
SIMPSON GUMPERTZ & HEGER
41 SEYON STREET, BLDG 1, SUITE 500
WALTHAM, MA 02453
781-907-9600

GEOTECHNICAL CONSULTANT
HALEY & ALDRICH, INC.
465 MEDFORD STREET, SUITE 2200
BOSTON, MA 02129
617-886-7389

SPECIFICATIONS
KALIN ASSOCIATES
1121 WASHINGTON ST., # 2
WEST NEWTON, MA 02465
617-964-5477

LIGHTING CONSULTANTS
SLADEN FEINSTEIN INTEG.
295 HUNTINGTON AVE., # 305
BOSTON, MA 02115
617-787-9600

REVISIONS

| NUMBER | DESCRIPTION | DATE |
|---|---|---|

STAMP

KEY PLAN

DATE.....10/19/2015
SCALE.....As indicated
DRAWN BY.....CDC
PROJECT NUMBER.....SAR15A.00
DRAWING TITLE
SECTIONS & DETAILS

1S-200
DRAWING NUMBER

SLAB NOTE R-1
1-1/2", 18 GA. GALV METAL ROOF DECK

PLAN NOTES:

PN1. COORDINATE TOP OF STEEL ELEVATIONS WITH ARCHITECTURAL DRAWINGS.

PN2. HOT-DIP GALVANZIZE ALL CANOPY STEEL, BASE PLATES, AND CONNECTIONS. SEAL WELD ALL SEAMS NOT OTHERWISE NOTED AS WELDED.

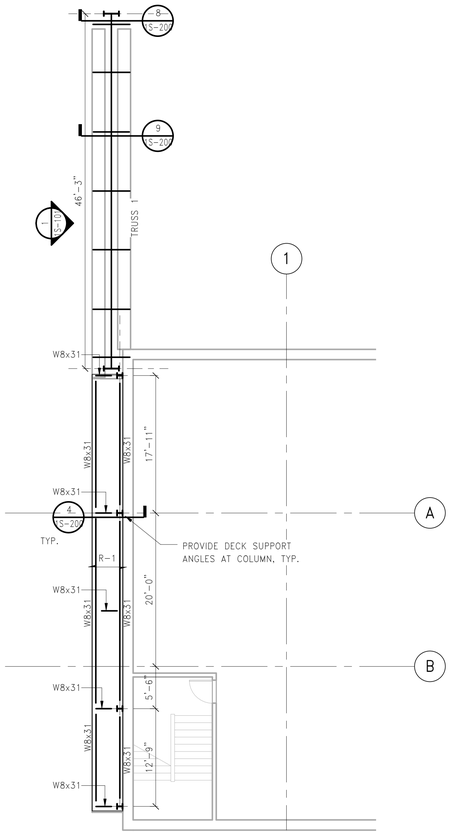


LEVEL 2 FRAMING PLAN
1/8" = 1'-0"

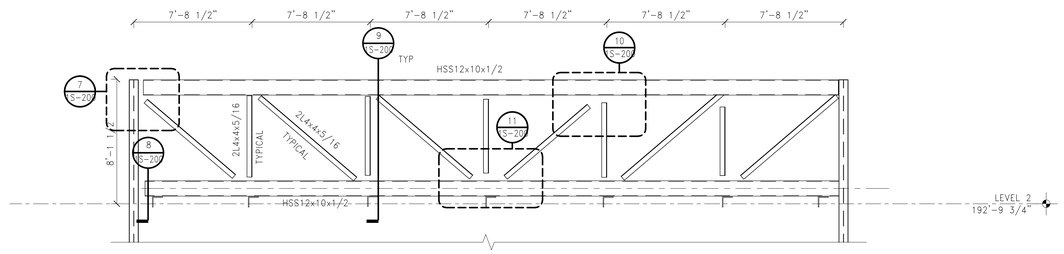


NOTES:
1. HOT-DIP GALVANIZE ALL STEEL, CONNECTORS, AND ANCHOR RODS.
2. PLUG WELD OR FILL WITH METALLIC PUTTY ALL VENT AND DRAIN HOLES.
3. SEAL WELD ALL SEAMS NOT OTHERWISE WELDED.

1 TRUSS 1 FRAMING ELEVATION
1/4" = 1'-0"


MPA MARGULIES PERRUZZI ARCHITECTS
308 Congress Street | Boston, MA 02210 | 617.482.3232 | www.mp-architects.com
Design for the way you work.


CLIENT INFORMATION
AS CLOCK TOWER OWNER, LLC c/o SARACEN PROPERTIES
MILL & MAIN RENOVATION PHASE 1
146 MAIN STREET
MAYNARD, MA 01754

CONSULTANT INFORMATION

MEP ENGINEERS
AHA CONSULTING ENGINEERS
24 HARTWELL AVE., 3RD FLOOR
LEXINGTON, MA 02421
781-372-3200

HARDWARE CONSULTANT
CAMPBELL-MCCABE, INC.
1 CLOCK TOWER PLACE
MAYNARD, MA 01754
781-899-8822

STRUCTURAL ENGINEER
SIMPSON GUMPERTZ & HEGER
41 SEYON STREET, BLDG 1, SUITE 500
WALTHAM, MA 02453
781-907-9000

CIVIL ENGINEER
NITSCH ENGINEERING
2 CENTER PLAZA, SUITE 430
BOSTON, MA 02108
617-338-0063

LANDSCAPE DESIGN
BROWN, RICHARDSON, & ROWE
3 POST OFFICE SQUARE, 3RD FLOOR
BOSTON, MA 02109
617-542-8552

GEOTECHNICAL CONSULTANT
HALEY & ALDRICH, INC.
465 MEDFORD STREET, SUITE 2200
BOSTON, MA 02129
617-886-7399

SPECIFICATIONS
KALIN ASSOCIATES
1121 WASHINGTON ST., #2
WEST NEWTON, MA 02465
617-964-5477

LIGHTING CONSULTANTS
SLADEN FEINSTEIN INTEG.
295 HUNTINGTON AVE., #305
BOSTON, MA 02115
617-267-9500

REVISIONS

| NUMBER | DESCRIPTION | DATE |
|---|---|---|

STAMP

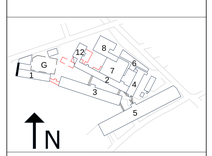


KEY PLAN

DATE.....10/19/2015
SCALE.....As indicated
DRAWN BY.....CDC
PROJECT NUMBER.....SAR15A.00

DRAWING TITLE
LEVEL 2 FRAMING PLAN

1S-101
DRAWING NUMBER

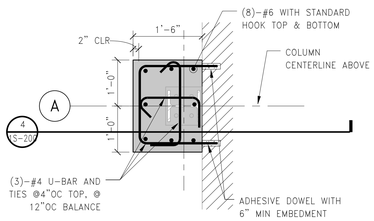


1 PILASTER TYPE P1
3/4" = 1'-0"

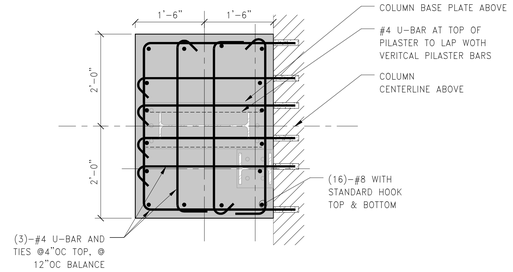


2 PILASTER TYPE P2
3/4" = 1'-0"

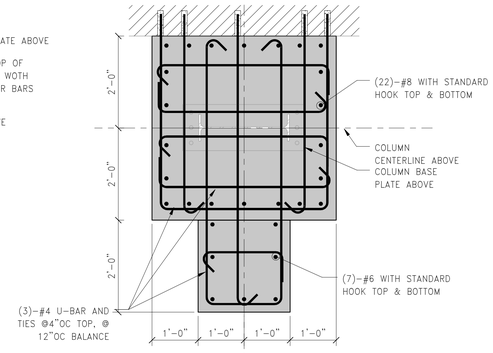


3 PILASTER TYPE P3
3/4" = 1'-0"

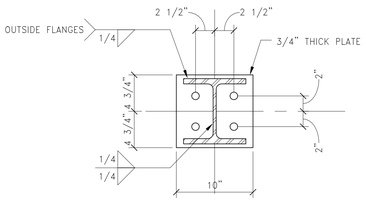


BASE PLATE TYPE 1

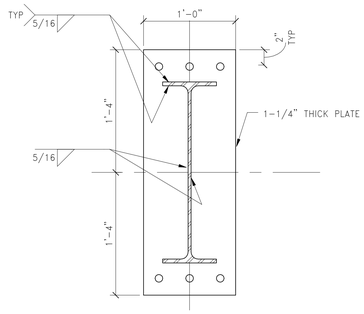


BASE PLATE TYPE 2

4 BASE PLATE LAYOUT
1 1/2" = 1'-0"

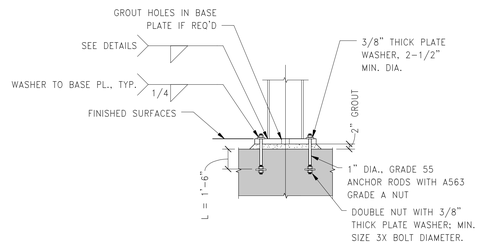


BASE PLATE NOTES:

1. ALL BASE PLATES ARE CENTERED ON GRID LINES UON.
2. PROVIDE LEVELING NUTS AND SHIM PLATES AS REQUIRED TO MAINTAIN COLUMN LEVELNESS.
3. MATCH SURFACE PREPARATION AND FINISH OF BEARING PLATE, ANCHOR RODS, WASHERS, AND PLATE WASHERS TO THAT OF COLUMNS.
4. WASHER PLATES SHALL BE A36.
5. BOLT LOCATIONS VARY. SEE BASE PLATE DETAILS FOR LOCATIONS.
6. SET ANCHOR RODS WITH TEMPLATE.

5 ANCHOR ROD DETAIL
1/2" = 1'-0"


MPA MARGULIES PERRUZZI ARCHITECTS
308 Congress Street | Boston, MA 02210 | 617.482.3232 | www.mp-architects.com
Design for the way you work.


CLIENT INFORMATION
AS CLOCK TOWER OWNER, LLC c/o SARACEN PROPERTIES

MILL & MAIN RENOVATION PHASE 1
146 MAIN STREET
MAYNARD, MA 01754

CONSULTANT INFORMATION

MEP ENGINEERS
AHA CONSULTING ENGINEERS
7A LAGHREA AVE, 2ND FLOOR
LEXINGTON, MA 02421
781-372-3200

HARDWARE CONSULTANT
CAMPBELL-MCCABE, INC.
1 CLOCK TOWER PLACE
MAYNARD, MA 01754
781-899-8822

STRUCTURAL ENGINEER
SIMPSON GUMPERTZ & HEGER
41 SEYON STREET, BLDG 1, SUITE 500
WALTHAM, MA 02453
781-907-9000

CIVIL ENGINEER
NITSCH ENGINEERING
2 CENTRAL SQ, SUITE 400
BOSTON, MA 02108
617-338-0063

LANDSCAPE DESIGN
BROWN, RICHARDSON, & ROWE
3 POST OFFICE SQUARE, 3RD FLOOR
BOSTON, MA 02109
617-542-8652

GEOTECHNICAL CONSULTANT
HALEY & ALDRICH, INC.
465 MEDFORD STREET, SUITE 2200
BOSTON, MA 02129
617-886-7399

SPECIFICATIONS
KALIN ASSOCIATES
1121 WASHINGTON ST., # 2
WEST NEWTON, MA 02465
617-964-5477

LIGHTING CONSULTANTS
SLADEN FEINSTEIN INTEG.
295 HUNTINGTON AVE., # 305
BOSTON, MA 02115
617-787-9500

REVISIONS

| NUMBER | DESCRIPTION | DATE |
|---|---|---|

STAMP

KEY PLAN

DATE.....10/19/2015
SCALE.....As indicated
DRAWN BY.....MSS
PROJECT NUMBER.....SAR15A.00

DRAWING TITLE
SECTIONS & DETAILS

1S-201
DRAWING NUMBER

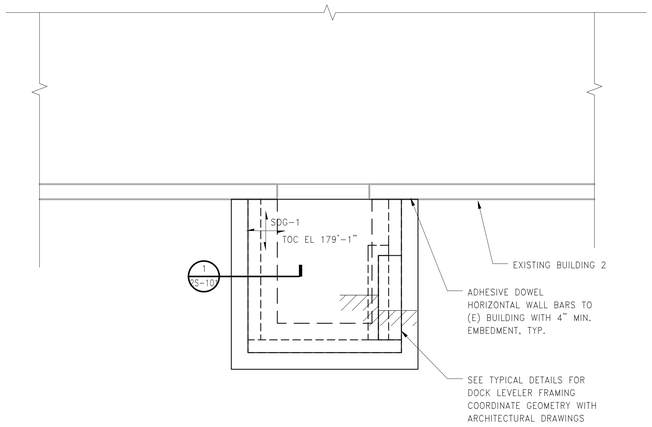


SLAB NOTE SDG-1
6" MIN. NORMAL WEIGHT CONCRETE SLAB-ON-GRADE REINFORCED WITH #4@15" OC EACH DIRECTION. CRUSHED STONE SUBBASE ON COMPACTED SUBGRADE.

BUILDING 2 LEVEL 3 LOADING DOCK PLAN
1/4" = 1'-0"

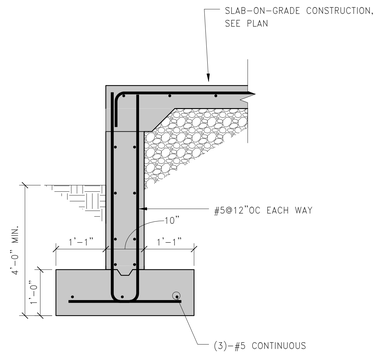


1 SECTION
3/4" = 1'-0"

MPA MARGULIES PERRUZZI ARCHITECTS
308 Congress Street | Boston, MA 02210 | 617.482.3232 | www.mp-architects.com
Design for the way you work.

CLIENT INFORMATION
AS CLOCK TOWER OWNER, LLC c/o SARACEN PROPERTIES
MILL & MAIN RENOVATION PHASE 1
146 MAIN STREET
MAYNARD, MA 01754

CONSULTANT INFORMATION

MEP ENGINEERS
AHA CONSULTING ENGINEERS
24 HARTWELL AVE., 3RD FLOOR
LEXINGTON, MA 02421
781-372-3200

HARDWARE CONSULTANT
CAMPBELL-MCCABE, INC.
1 CLOCK TOWER PLACE
MAYNARD, MA 01754
781-899-8822

SIMPSON GUMPERTZ & HEGER
41 SEYON STREET, BLDG 1, SUITE 500
WALTHAM, MA 02453
781-907-9000

CIVIL ENGINEER
NITSCH ENGINEERING
2 CENTER PLAZA, SUITE 430
BOSTON, MA 02108
617-338-0063

LANDSCAPE DESIGN
BROWN, RICHARDSON, & ROWE
3 POST OFFICE SQUARE, 3RD FLOOR
BOSTON, MA 02109
617-542-8552

GEOTECHNICAL CONSULTANT
HALEY & ALDRICH, INC.
465 MEDFORD STREET, SUITE 2200
BOSTON, MA 02129
617-886-7399

SEPCIFICATIONS
KALIN ASSOCIATES
1121 WASHINGTON ST., #2
WEST NEWTON, MA 02465
617-964-5477

LIGHTING CONSULTANT
SLADEN FEINSTEIN INTEG.
295 HUNTINGTON AVE., #305
BOSTON, MA 02115
617-267-9500

REVISIONS

| NUMBER | DESCRIPTION | DATE |
|---|---|---|

STAMP

KEY PLAN

DATE.....10/19/2015
SCALE.....As indicated
DRAWN BY.....MSS
PROJECT NUMBER.....SAR15A.00
DRAWING TITLE
LEVEL 3 - LOADING DOCK PLAN

2S-101
DRAWING NUMBER

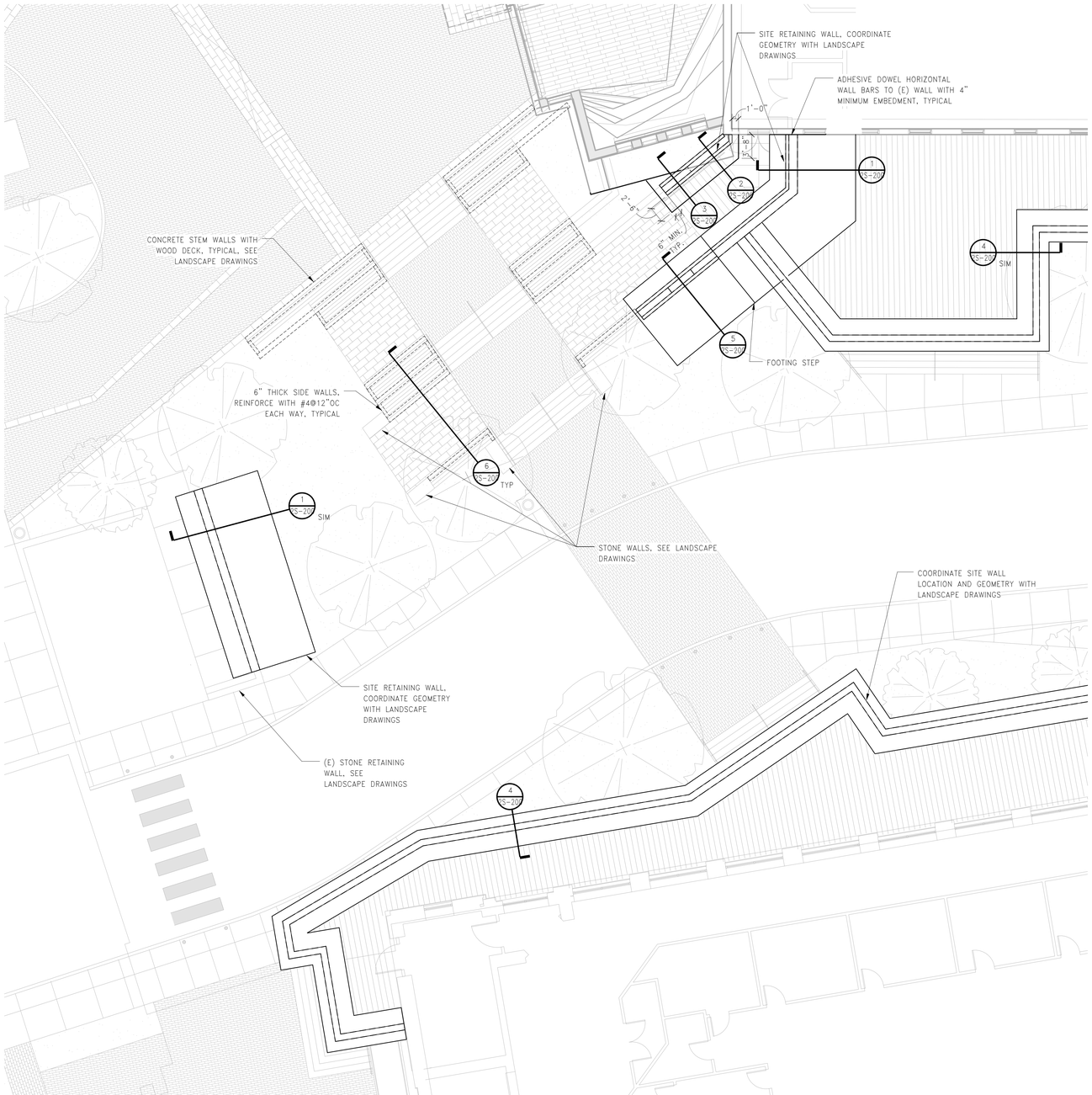


LANDSCAPE PART PLAN 1
1/8" = 1'-0"

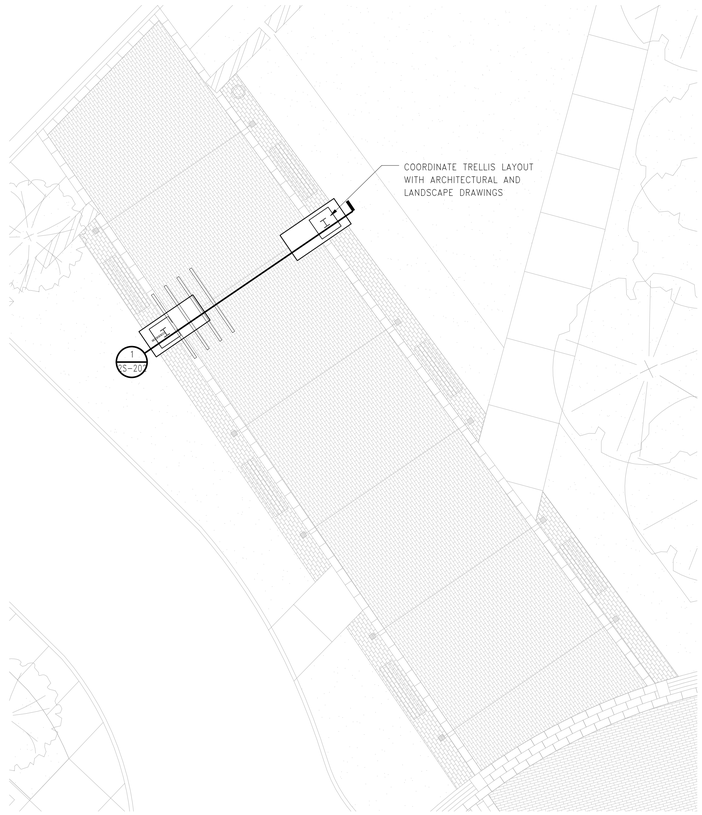


LANDSCAPE PART PLAN 2
1/8" = 1'-0"

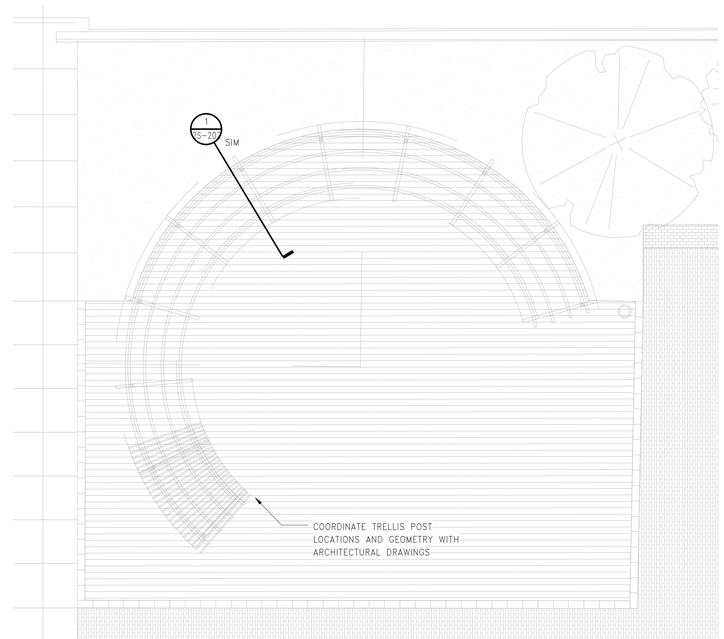


LANDSCAPE PART PLAN 3
1/8" = 1'-0"

MPA MARGULIES PERRUZZI ARCHITECTS
308 Congress Street | Boston, MA 02210 | 617.482.3232 | www.mp-architects.com

Design for the way you work.

CLIENT INFORMATION
AS CLOCK TOWER OWNER, LLC c/o SARACEN PROPERTIES

MILL & MAIN RENOVATION PHASE 1
146 MAIN STREET
MAYNARD, MA 01754

CONSULTANT INFORMATION

MEP ENGINEERS
AHA CONSULTING ENGINEERS
24 HARTWELL AVE., 3RD FLOOR
LEXINGTON, MA 02421
781-372-3200

HARDWARE CONSULTANT
CAMPBELL-MCCABE, INC.
1 CLOCK TOWER PLACE
MAYNARD, MA 01754
781-899-8822

SIMPSON GUMPERTZ & HEGER
41 SEYON STREET, BLDG 1, SUITE 500
WALTHAM, MA 02453
781-907-9000

CIVIL ENGINEER
NITSCH ENGINEERING
2 CENTER PLAZA, SUITE 430
BOSTON, MA 02108
617-338-0063

LANDSCAPE DESIGN
BROWN, RICHARDSON, & ROWE
3 POST OFFICE SQUARE, 3RD FLOOR
BOSTON, MA 02109
617-542-8552

GEOTECHNICAL CONSULTANT
HALEY & ALDRICH, INC.
465 MEDFORD STREET, SUITE 2200
BOSTON, MA 02129
617-886-7399

SEPCIFICATIONS
KALIN ASSOCIATES
1121 WASHINGTON ST. #2
WEST NEWTON, MA 02465
617-964-5477

LIGHTING CONSULTANT
SLADEN FEINSTEIN INTEG.
295 HUNTINGTON AVE., #305
BOSTON, MA 02115
617-267-9500

REVISIONS

| NUMBER | DESCRIPTION | DATE |
|---|---|---|

STAMP

KEY PLAN

DATE.....10/19/2015
SCALE.....1/8" = 1'-0"
DRAWN BY.....MSS
PROJECT NUMBER.....SAR15A.00

DRAWING TITLE
LEVEL 3 - LANDSCAPE PART PLANS

2S-102
DRAWING NUMBER

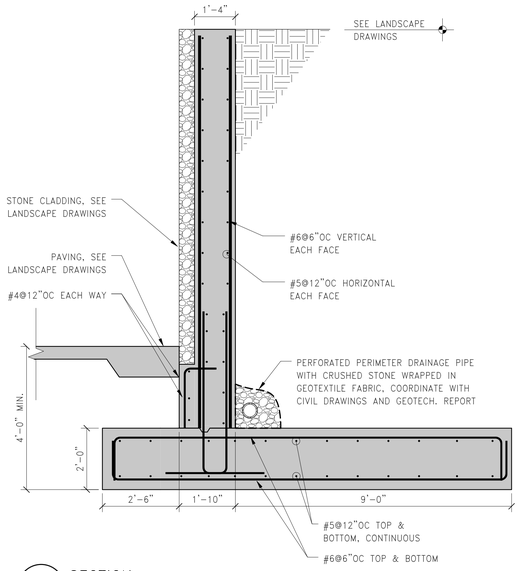


1 SECTION
1/2" = 1'-0"

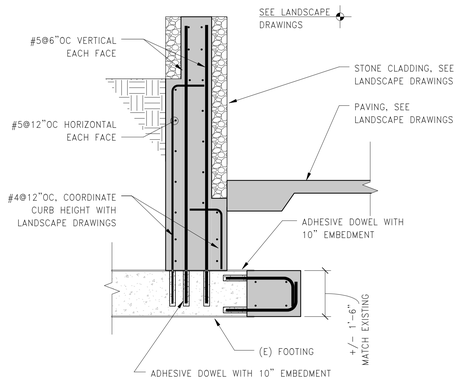


2 SECTION
1/2" = 1'-0"

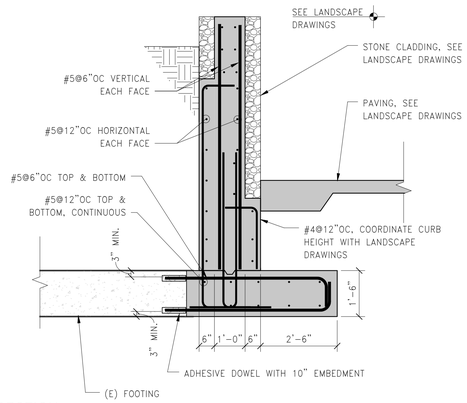


3 SECTION
1/2" = 1'-0"

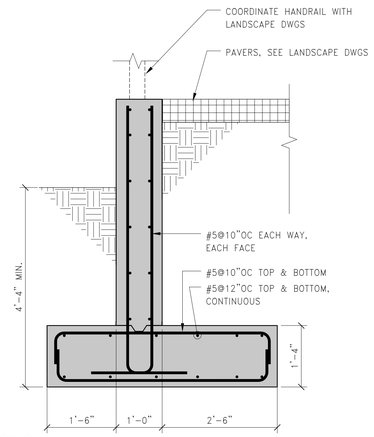


4 SECTION
3/4" = 1'-0"

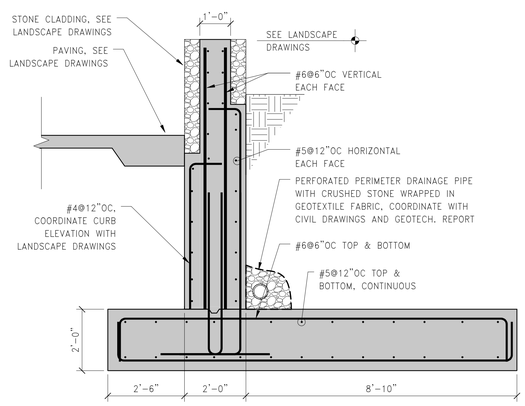


5 SECTION
1/2" = 1'-0"

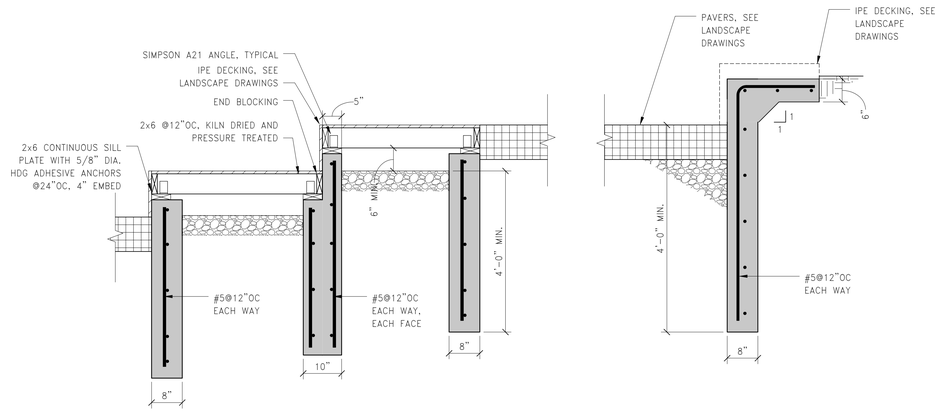


6 SECTION
3/4" = 1'-0"


MPA MARGULIES PERRUZZI ARCHITECTS
308 Congress Street | Boston, MA 02210 | 617.482.3232 | www.mp-architects.com
Design for the way you work.


CLIENT INFORMATION
AS CLOCK TOWER OWNER, LLC c/o SARACEN PROPERTIES

MILL & MAIN RENOVATION PHASE 1
146 MAIN STREET
MAYNARD, MA 01754

CONSULTANT INFORMATION

MEP ENGINEERS
AHA CONSULTING ENGINEERS
2 MILLSTONE PLACE, 3RD FLOOR
LEXINGTON, MA 02421
781-372-3200

HARDWARE CONSULTANT
CAMPBELL-MCCABE, INC.
1 CLOCK TOWER PLACE
MAYNARD, MA 01754
781-899-9922

SIMPSON GUMPERTZ & HEGER
41 SEYON STREET, BLDG 1, SUITE 500
WALTHAM, MA 02453
781-907-9000

CIVIL ENGINEER
NITSCH ENGINEERING
2 CENTRAL SQUARE, SUITE 450
BOSTON, MA 02108
617-338-0063

LANDSCAPE DESIGN
BROWN, RICHARDSON, & ROWE
3 POST OFFICE SQUARE, 3RD FLOOR
BOSTON, MA 02109
617-542-8652

GEOTECHNICAL CONSULTANT
HALEY & ALDRICH, INC.
465 MEDFORD STREET, SUITE 2200
BOSTON, MA 02129
617-886-7300

SPECIFICATIONS
KALIN ASSOCIATES
1151 WASHINGTON ST., #2
WEST NEWTON, MA 02465
617-964-5477

LIGHTING CONSULTANT
SLADEN FEINSTEIN INTEG.
295 HUNTINGTON AVE., #305
BOSTON, MA 02115
617-787-9500

REVISIONS

| NUMBER | DESCRIPTION | DATE |
|---|---|---|
| | | |

STAMP

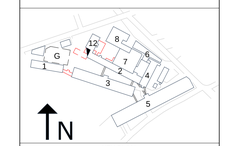


KEY PLAN

DATE.....10/19/2015
SCALE.....As indicated
DRAWN BY.....MSS
PROJECT NUMBER.....SAR15A.00

DRAWING TITLE
SECTIONS & DETAILS

2S-200
DRAWING NUMBER

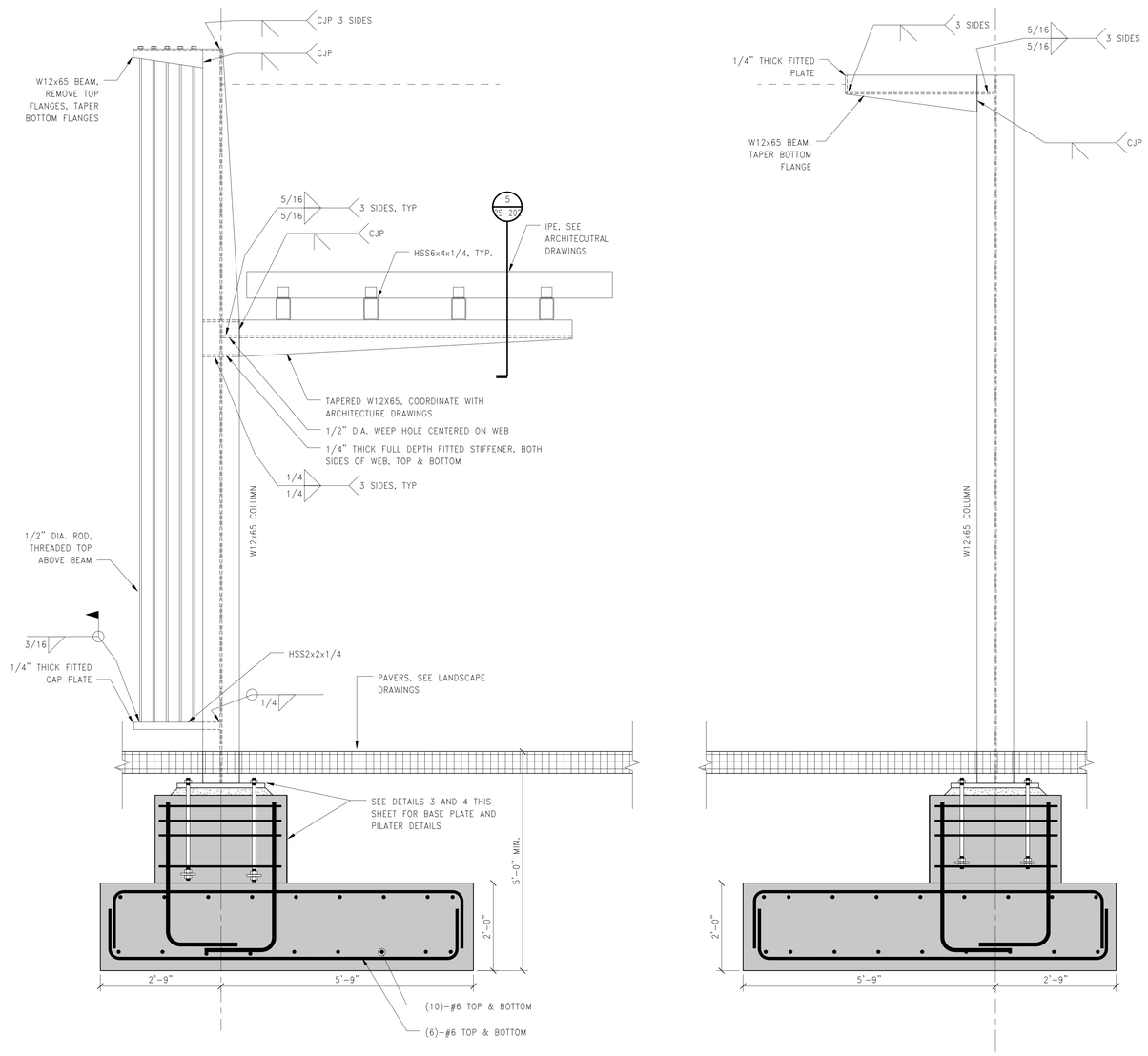


NOTES:

1. HOT-DIP GALVANIZE ALL STEEL, CONNECTORS, AND ANCHOR RODS.
2. PLUG WELD OR FILL WITH METALLIC PUTTY ALL VENT AND DRAIN HOLES.
3. PLACE ALL VENT AND DRAIN HOLES AWAY FROM VIEW.
4. SEAL WELD ALL SEAMS NOT OTHERWISE WELDED.
5. COORDINATE DIMENSIONS WITH ARCHITECTURAL DRAWINGS.

1 SECTION
3/4" = 1'-0"

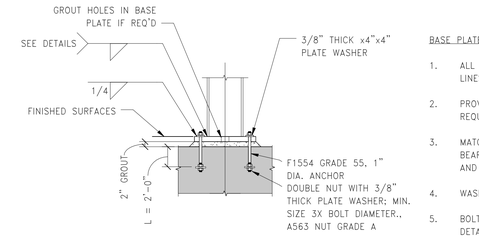


BASE PLATE NOTES:

1. ALL BASE PLATES ARE CENTERED ON GRID LINES UON.
2. PROVIDE LEVELING NUTS AND SHIM PLATES AS REQUIRED TO MAINTAIN COLUMN LEVELNESS.
3. MATCH SURFACE PREPARATION AND FINISH OF BEARING PLATE, ANCHOR RODS, WASHERS, AND PLATE WASHERS TO THAT OF COLUMNS.
4. WASHER PLATES SHALL BE A36.
5. BOLT LOCATIONS VARY. SEE BASE PLATE DETAILS FOR LOCATIONS.
6. SET ANCHOR RODS WITH TEMPLATE.

2 ANCHOR ROD DETAIL
1/2" = 1'-0"

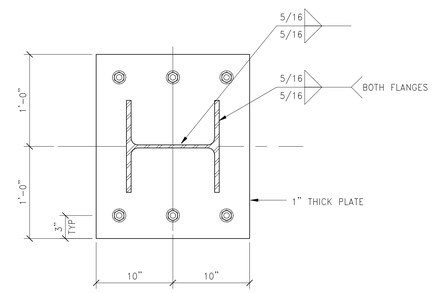


3 BASE PLATE
1 1/2" = 1'-0"

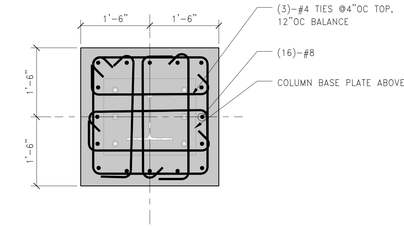


4 PILASTER DETAIL
3/4" = 1'-0"

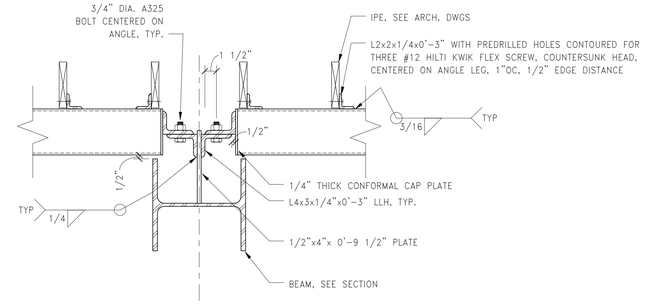


5 SECTION
1 1/2" = 1'-0"

MPA MARGULIES PERRUZZI ARCHITECTS
308 Congress Street | Boston, MA 02210 | 617.482.3232 | www.mp-architects.com
Design for the way you work.

CLIENT INFORMATION
AS CLOCK TOWER OWNER, LLC c/o SARACEN PROPERTIES

MILL & MAIN RENOVATION PHASE 1
146 MAIN STREET
MAYNARD, MA 01754

CONSULTANT INFORMATION

MEP ENGINEERS
AHA CONSULTING ENGINEERS
7A LAGHORN AVE, 3RD FLOOR
LEXINGTON, MA 02421
781-372-3200

HARDWARE CONSULTANT
CAMPBELL-MCCABE, INC.
1 CLOCK TOWER PLACE
MAYNARD, MA 01754
781-899-8822

CIVIL ENGINEER
NITSCH ENGINEERING
2 CONSTITUTION PLAZA, SUITE 650
BOSTON, MA 02108
617-338-0063

LANDSCAPE DESIGN
BROWN, RICHARDSON, & ROWE
3 POST OFFICE SQUARE, 3RD FLOOR
BOSTON, MA 02109
617-542-5853

GEOTECHNICAL CONSULTANT
HALEY & ALDRICH, INC.
465 MEDFORD STREET, SUITE 2200
BOSTON, MA 02129
617-886-7399

SIMPSON GUMPERTZ & HEGER
41 SEYON STREET, BLDG 1, SUITE 500
WALTHAM, MA 02453
781-907-9600

SPECIFICATIONS
KALIN ASSOCIATES
1121 WASHINGTON ST., # 2
WEST NEWTON, MA 02465
617-964-5477

LIGHTING CONSULTANT
SLADEN FEINSTEIN INTEG.
295 HUNTINGTON AVE., # 305
BOSTON, MA 02115
617-787-9500

REVISIONS

| NUMBER | DESCRIPTION | DATE |
|---|---|---|

STAMP

KEY PLAN

DATE.....10/19/2015
SCALE.....As indicated
DRAWN BY.....MSS
PROJECT NUMBER.....SAR15A.00

DRAWING TITLE
SECTIONS & DETAILS

2S-202
DRAWING NUMBER

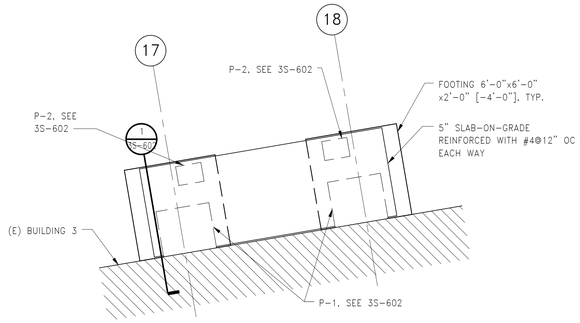


NOTES:
1. [x'-xx"] ON PLAN INDICATES BOTTOM OF FOOTING ELEVATION.
2. SEE DETAIL 6 ON S-010 FOR SOG AT PIERS.

1 LEVEL 1 PASS THROUGH NORTH FRAMING PLAN
1/4" = 1'-0"

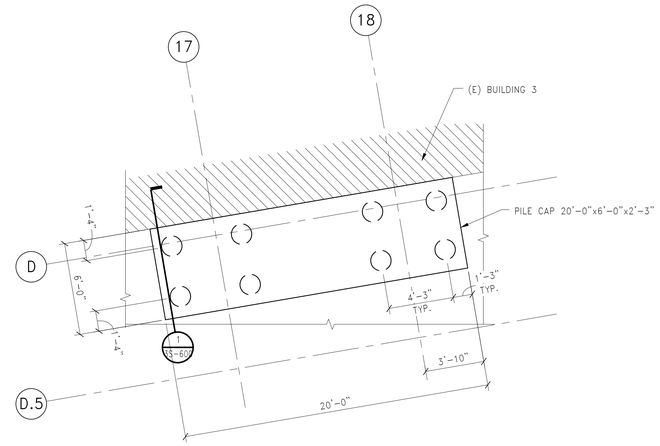


2 LEVEL 1 PASS THROUGH SOUTH FRAMING PLAN
1/4" = 1'-0"

MPA MARGULIES PERRUZZI ARCHITECTS
308 Congress Street | Boston, MA 02210 | 617.402.3232 | www.mp-architects.com
Design for the way you work.

CLIENT INFORMATION
AS CLOCK TOWER OWNER, LLC c/o SARACEN PROPERTIES
MILL & MAIN RENOVATION PHASE 1
146 MAIN STREET
MAYNARD, MA 01751

CONSULTANT INFORMATION

MEP ENGINEERS
AHA CONSULTING ENGINEERS
24 HARTWELL AVE, 3RD FLOOR
LEXINGTON, MA 02421
781-372-3000

HARDWARE CONSULTANT
CAMPBELL-MCCABE, INC.
1 CLOCK TOWER PLACE
MAYNARD, MA 01754
781-899-8822

STRUCTURAL ENGINEER
SIMPSON GUMPERTZ & HEGER
41 SEYON STREET, BLDG 1, SUITE 500
WALTHAM, MA 02453
781-907-9200

CIVIL ENGINEER
NITSCH ENGINEERING
2 CENTRAL AVE, SUITE 400
BOSTON, MA 02108
617-542-8352

LANDSCAPE DESIGN
BROWN, RICHARDSON, & ROWE
3 POST OFFICE SQUARE, 3RD FLOOR
BOSTON, MA 02109
617-542-8552

GEOTECHNICAL CONSULTANT
HALEY & ALDRICH, INC.
465 MEDFORD STREET, SUITE 2200
BOSTON, MA 02129
617-886-7397

SPECIFICATIONS
KALIN ASSOCIATES
1721 WASHINGTON ST, #2
WEST NEWTON, MA 02465
617-964-5477

LIGHTING CONSULTANTS
SLADEN FEINSTEIN INTEG.
295 HUNTINGTON AVE., #305
BOSTON, MA 02115
617-267-9500

REVISIONS

| NUMBER | DESCRIPTION | DATE |
|---|---|---|

STAMP

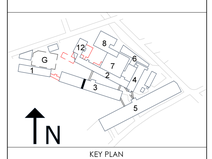


KEY PLAN

DATE.....10/19/2015
SCALE.....1/4" = 1'-0"
DRAWN BY.....MAT
PROJECT NUMBER.....SAR15A.00

DRAWING TITLE
BUILDING 3 PASS THROUGH FRAMING PART PLANS

3S-100
DRAWING NUMBER

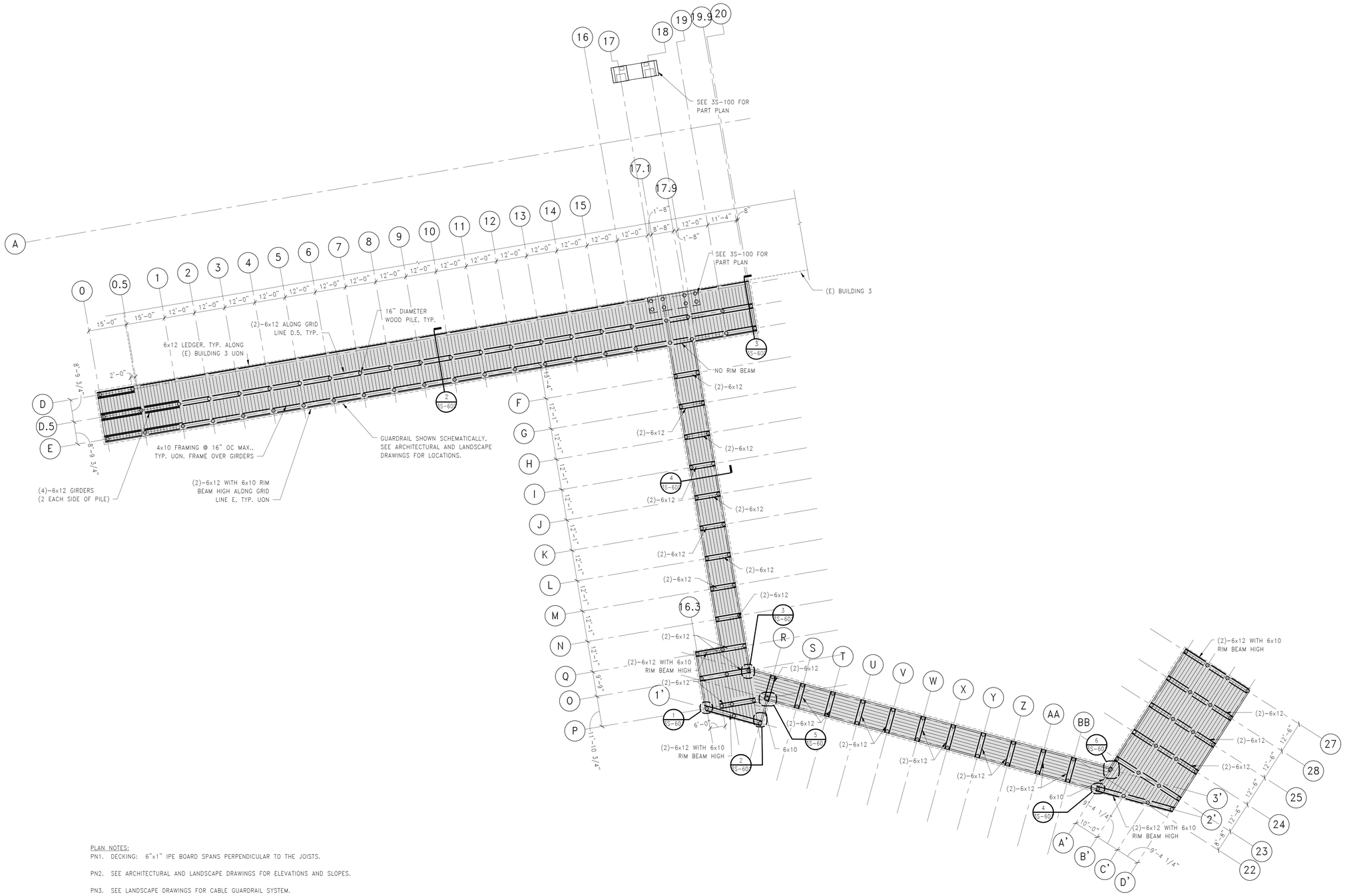


PLAN NOTES:

PN1. DECKING: 6"x1" IPE BOARD SPANS PERPENDICULAR TO THE JOISTS.

PN2. SEE ARCHITECTURAL AND LANDSCAPE DRAWINGS FOR ELEVATIONS AND SLOPES.

PN3. SEE LANDSCAPE DRAWINGS FOR CABLE GUARDRAIL SYSTEM.

PN4. ALL WOOD FRAMING IS PRESSURE TREATED.

PN5. ALL STEEL AND CONNECTORS ARE EITHER HDG OR STAINLESS STEEL AS NOTED IN SECTIONS AND DETAILS.

PN6. SEE DETAIL 6 ON 3S-600 FOR GIRDER SPLICE DETAIL.

PN7. PROVIDE CONTINUOUS 4"X10" BLOCKING AT MIDSPAN OF JOISTS. FASTEN WITH HDG U410 HANGERS BY SIMPSON STRONGTIE.

PN8. REFER TO 3S/600 FOR LIGHT POLE SUPPORT DETAILS.

## BOARDWALK AND PIER FRAMING PLAN

1/16" = 1'-0"


MPA MARGULIES PERRUZZI ARCHITECTS
308 Congress Street | Boston, MA 02210 | 617.482.3232 | www.mp-architects.com
Design for the way you work.


CLIENT INFORMATION
AS CLOCK TOWER OWNER, LLC c/o SARACEN PROPERTIES
MILL & MAIN RENOVATION PHASE 1
146 MAIN STREET
MAYNARD, MA 01751

CONSULTANT INFORMATION

MEP ENGINEERS
AHA CONSULTING ENGINEERS
24 HARTWELL AVE., 3RD FLOOR
LEXINGTON, MA 02421
781-372-3200

HARDWARE CONSULTANT
CAMPBELL-MCCABE, INC.
1 CLOCK TOWER PLACE
MAYNARD, MA 01754
781-899-8822

STRUCTURAL ENGINEER
SIMPSON GUMPERTZ & HEGER
41 SEYON STREET, BLDG 1, SUITE 500
WALTHAM, MA 02453
781-907-9000

CIVIL ENGINEER
NITSCH ENGINEERING
2 CENTER PLAZA, SUITE 430
BOSTON, MA 02108
617-542-8552

LANDSCAPE DESIGN
BROWN, RICHARDSON, & ROWE
3 POST OFFICE SQUARE, 3RD FLOOR
BOSTON, MA 02109
617-542-8552

GEOTECHNICAL CONSULTANT
HALEY & ALDRICH, INC.
465 MEDFORD STREET, SUITE 2200
BOSTON, MA 02129
617-886-7399

SPECIFICATIONS
KALIN ASSOCIATES
1121 WASHINGTON ST., #2
WEST NEWTON, MA 02465
617-964-5477

LIGHTING CONSULTANTS
SLADEN FEINSTEIN INTEG.
295 HUNTINGTON AVE., #305
BOSTON, MA 02115
617-267-9500

REVISIONS

| NUMBER | DESCRIPTION | DATE |
|---|---|---|

STAMP

KEY PLAN

DATE.....10/19/2015
SCALE.....1/16" = 1'-0"
DRAWN BY.....MAT
PROJECT NUMBER.....SAR15A.00

DRAWING TITLE
BOARDWALK AND PIER FRAMING PLAN

# 3S-100A

DRAWING NUMBER

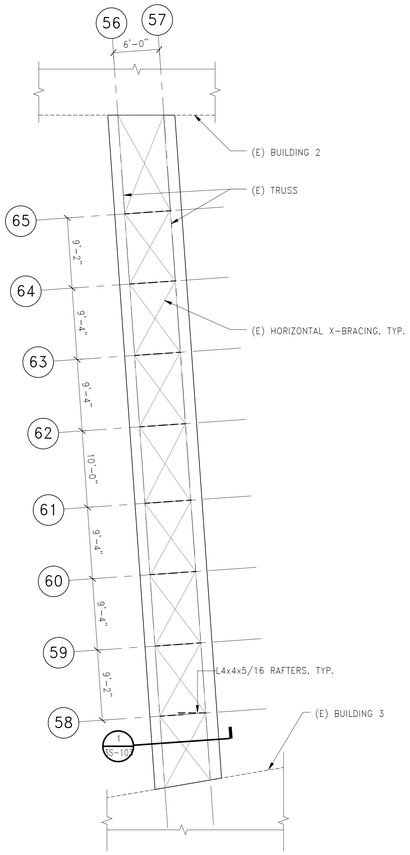


## BRIDGE A ROOF PLAN

1/8" = 1'-0"

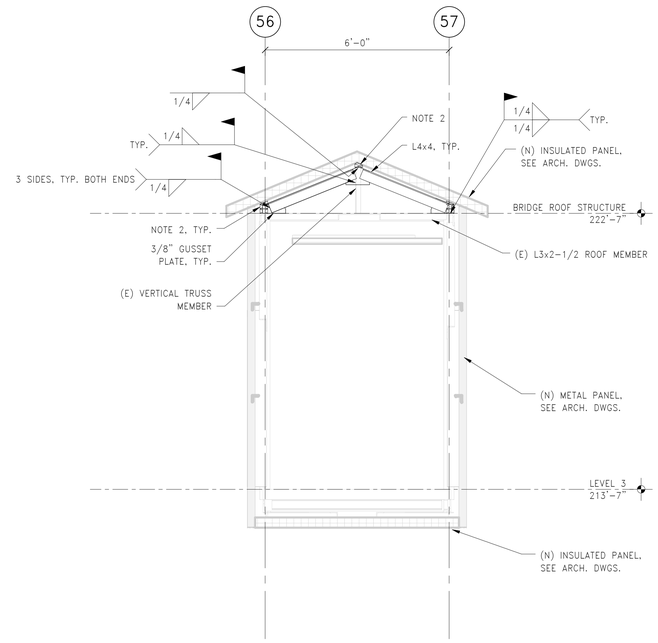


NOTES:
1. COORDINATE ELEVATIONS WITH ARCH. DWGS.
2. PROVIDE WOOD BLOCKING PER PANEL MANUFACTURER REQUIREMENTS.

## 1 BRIDGE SECTION

1/2" = 1'-0"


MPA MARGULIES PERRUZZI ARCHITECTS
308 Congress Street | Boston, MA 02210 | 617.402.3232 | www.mp-architects.com
Design for the way you work.


CLIENT INFORMATION
AS CLOCK TOWER OWNER, LLC c/o SARACEN PROPERTIES

MILL & MAIN RENOVATION PHASE 1
146 MAIN STREET
MAYNARD, MA 01751

CONSULTANT INFORMATION

MEP ENGINEERS
AHA CONSULTING ENGINEERS
27 HARTWELL AVE, 3RD FLOOR
LEXINGTON, MA 02421
781-372-5200

CIVIL ENGINEER
NITSCH ENGINEERING
2 CENTRAL SQUARE, SUITE 400
BOSTON, MA 02108
617-542-8552

SPECIFICATIONS
KALIN ASSOCIATES
1721 WASHINGTON ST. #2
NEWTONVILLE, MA 02460
617-964-5477

HARDWARE CONSULTANT
CAMPBELL-MCCABE, INC.
1 CLOCK TOWER PLACE
MAYNARD, MA 01754
781-899-8822

LANDSCAPE DESIGN
BROWN, RICHARDSON, & ROWE
3 POST OFFICE SQUARE, 3RD FLOOR
BOSTON, MA 02109
617-542-8552

LIGHTING CONSULTANTS
SLADEN FEINSTEIN INTEG.
295 HUNTINGTON AVE., #305
BOSTON, MA 02115
617-267-9500

STRUCTURAL ENGINEER
SIMPSON GUMPERTZ & HEGER
41 SEYON STREET, BLDG 1, SUITE 500
WALTHAM, MA 02453
781-907-9000

GEOTECHNICAL CONSULTANT
HALEY & ALDRICH, INC.
465 MEDFORD STREET, SUITE 2200
BOSTON, MA 02129
617-886-7397

REVISIONS

| NUMBER | DESCRIPTION | DATE |
|---|---|---|
| | | |

STAMP

KEY PLAN

DATE.....10/19/2015
SCALE.....As indicated
DRAWN BY.....MAT
PROJECT NUMBER.....SAR15A.00

DRAWING TITLE
BRIDGE ROOF FRAMING PLAN

**3S-103**

DRAWING NUMBER

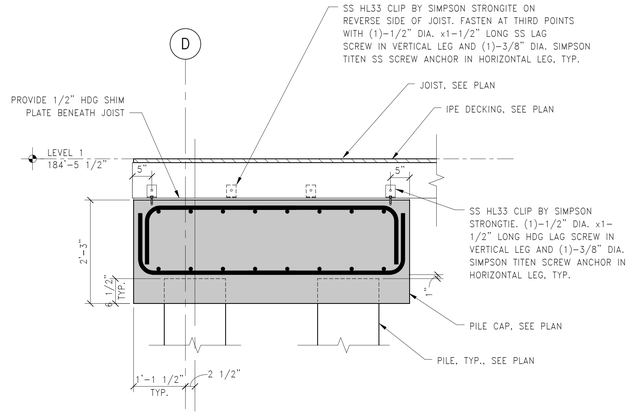


1 JOIST AT PILE CAP DETAIL
3/4" = 1'-0"

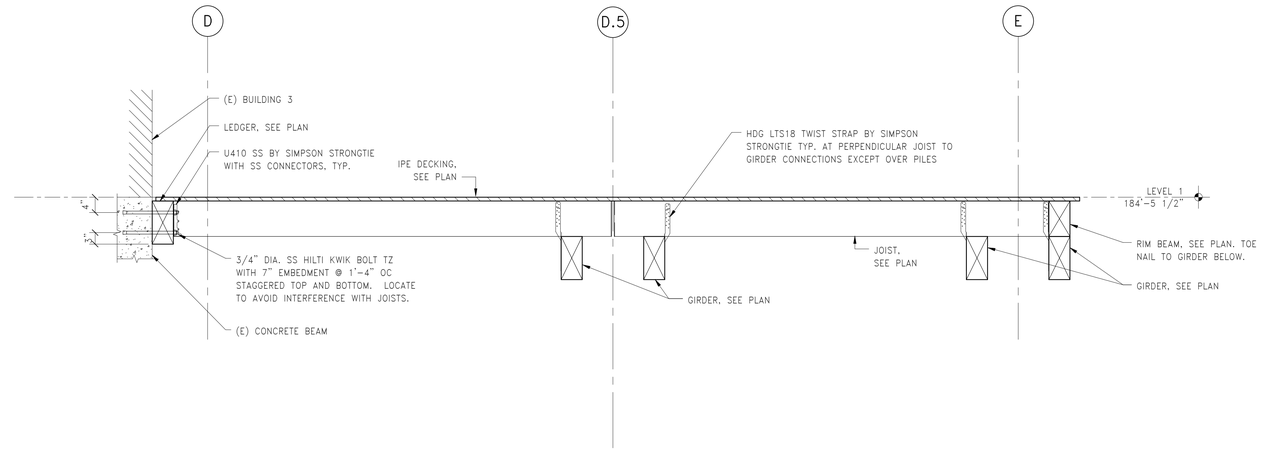


2 SECTION
3/4" = 1'-0"

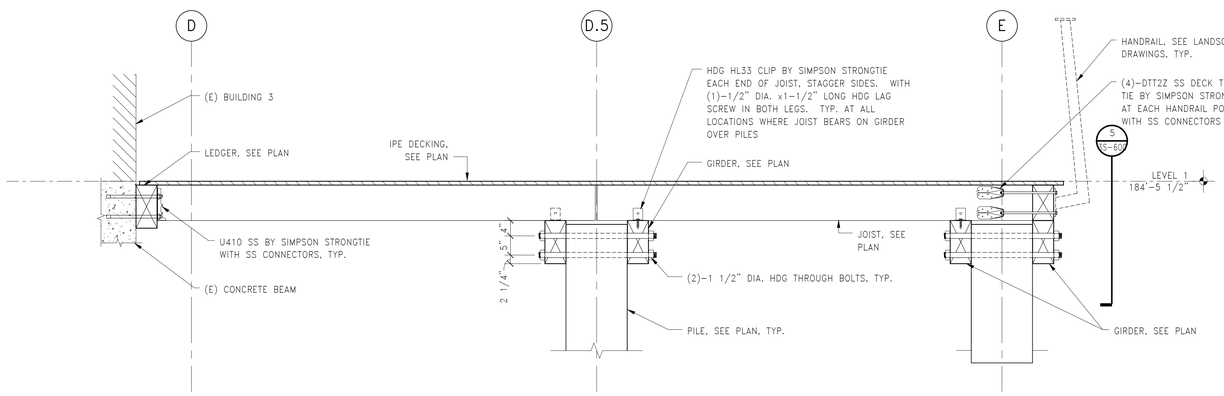


NOTES:
1. SEE DETAIL 2 THIS SHEET FOR BALANCE OF INFORMATION.

3 SECTION
3/4" = 1'-0"

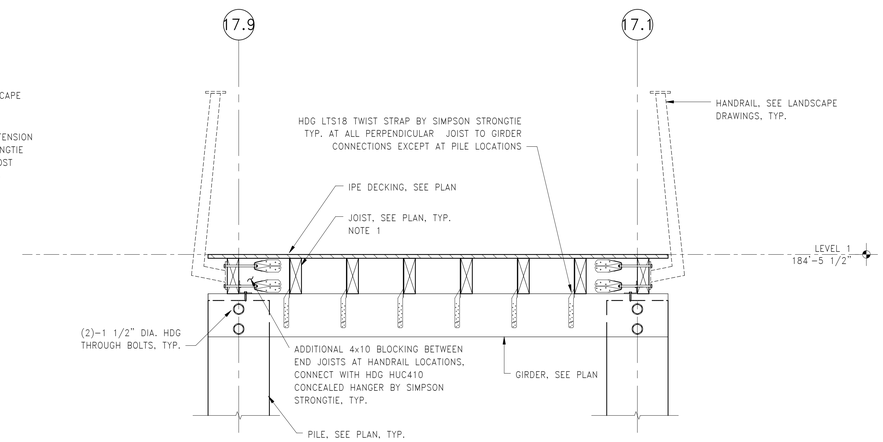


NOTES:
1. SEE DETAILS 2 AND 3 THIS SHEET FOR BALANCE OF INFORMATION.

4 SECTION
3/4" = 1'-0"

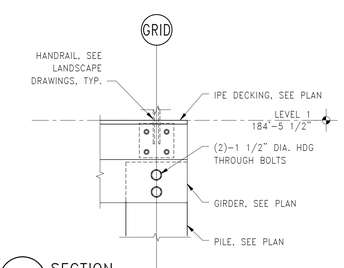


5 SECTION
3/4" = 1'-0"

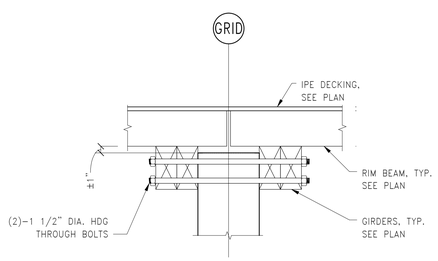


NOTES:
1. SEE DETAIL 7 THIS SHEET FOR BALANCE OF INFORMATION

6 GIRDER SPLICE DETAIL
3/4" = 1'-0"

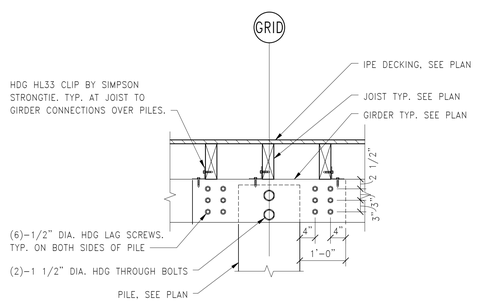


NOTES:
1. AT OFFSET GIRDER SPLICE, PROVIDE 6"x12" BLOCKING BELOW RIM BEAM TO PROVIDE CONTINUOUS BEARING FOR RIM BEAM. ATTACH BLOCKING TO GIRDER WITH HDG 1/2" DIA. THROUGH BOLTS AT 8" O.C.

7 GIRDER SPLICE DETAIL
3/4" = 1'-0"

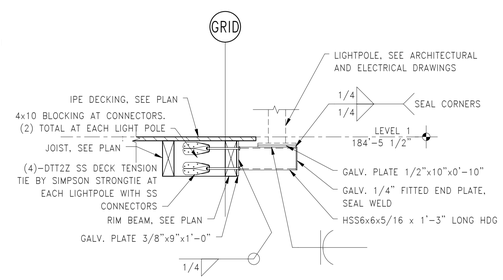


NOTES:
1. COORDINATE LIGHTPOLE LOCATIONS WITH ARCHITECTURAL AND ELECTRICAL DRAWINGS.
2. INSTALL LIGHTPOLE SUPPORTS WITHIN 1' 6" OF PILES

8 LIGHT POLE SUPPORT DETAIL
3/4" = 1'-0"

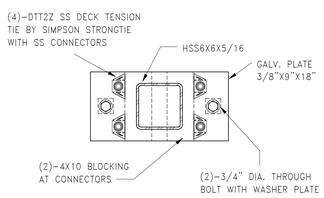


NOTES:
1. COORDINATE LIGHTPOLE LOCATIONS WITH ARCHITECTURAL AND ELECTRICAL DRAWINGS.
2. INSTALL LIGHTPOLE SUPPORTS WITHIN 1' 6" OF PILES

9 LIGHT POLE SUPPORT DETAIL
1 1/2" = 1'-0"


MPA MARGULIES PERRUZZI ARCHITECTS
308 Congress Street | Boston, MA 02210 | 617.402.3232 | www.mp-architects.com
Design for the way you work.


CLIENT INFORMATION
AS CLOCK TOWER OWNER, LLC c/o SARACEN PROPERTIES
MILL & MAIN RENOVATION PHASE 1
146 MAIN STREET
MAYNARD, MA 01751

CONSULTANT INFORMATION

MEP ENGINEERS
AHA CONSULTING ENGINEERS
24 MERRIMACK STREET, 2ND FLOOR
LEXINGTON, MA 02421
781-372-5200

HARDWARE CONSULTANT
CAMPBELL-MCCABE, INC.
1 CLOCK TOWER PLACE
MAYNARD, MA 01754
781-899-8822

STRUCTURAL ENGINEER
SIMPSON GUMPERTZ & HEGER
41 SEYON STREET, BLDG 1, SUITE 500
WALTHAM, MA 02453
781-907-9200

CIVIL ENGINEER
NITSCH ENGINEERING
2 CENTRAL PARK, SUITE 400
BOSTON, MA 02108
617-542-8652

LANDSCAPE DESIGN
BROWN, RICHARDSON, & ROWE
3 POST OFFICE SQUARE, 3RD FLOOR
BOSTON, MA 02109
617-542-8652

GEOTECHNICAL CONSULTANT
HALEY & ALDRICH, INC.
465 MEDFORD STREET, SUITE 2200
BOSTON, MA 02129
617-886-7397

SPECIFICATIONS
KALIN ASSOCIATES
1721 WASHINGTON ST. #2
WEST NEWTON, MA 02465
617-964-5477

LIGHTING CONSULTANTS
SLADEN FEINSTEIN INTEG.
295 HUNTINGTON AVE., #305
BOSTON, MA 02115
617-267-9500

REVISIONS

| NUMBER | DESCRIPTION | DATE |
|---|---|---|
| | | |

STAMP

KEY PLAN

DATE.....10/19/2015
SCALE.....As indicated
DRAWN BY.....MAT
PROJECT NUMBER.....SAR15A.00

DRAWING TITLE
BOARDWALK AND PIER DETAILS

3S-600
DRAWING NUMBER

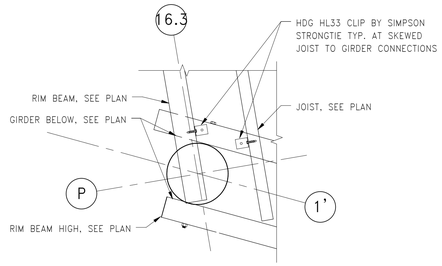


NOTES:
1. DECK NOT SHOWN FOR CLARITY

1 PLAN DETAIL
3/4" = 1'-0"

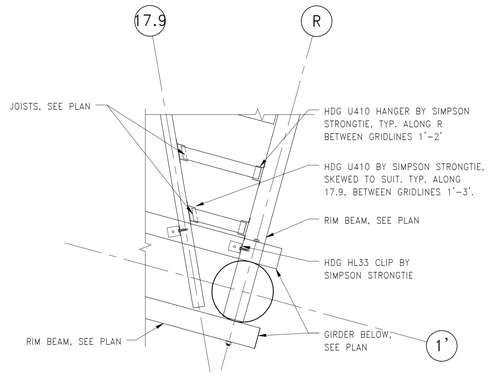


NOTES:
1. DECK NOT SHOWN FOR CLARITY

2 PLAN DETAIL
3/4" = 1'-0"

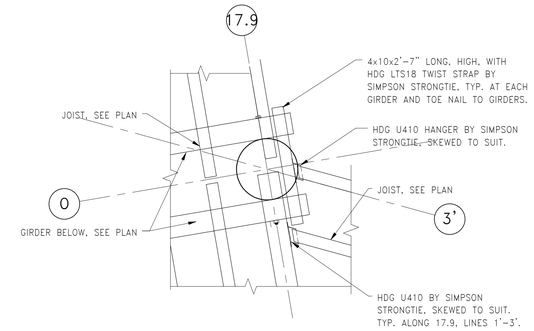


NOTES:
1. DECK NOT SHOWN FOR CLARITY

3 PLAN DETAIL
3/4" = 1'-0"

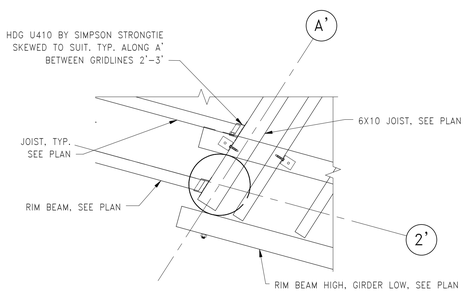


NOTES:
1. DECK NOT SHOWN FOR CLARITY

4 PLAN DETAIL
3/4" = 1'-0"

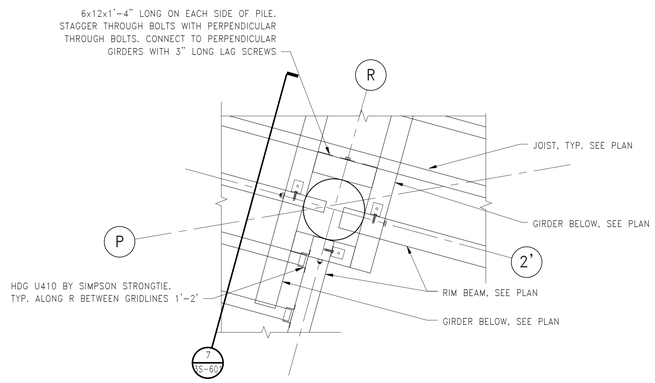


NOTES:
1. DECK NOT SHOWN FOR CLARITY

5 PLAN DETAIL
3/4" = 1'-0"

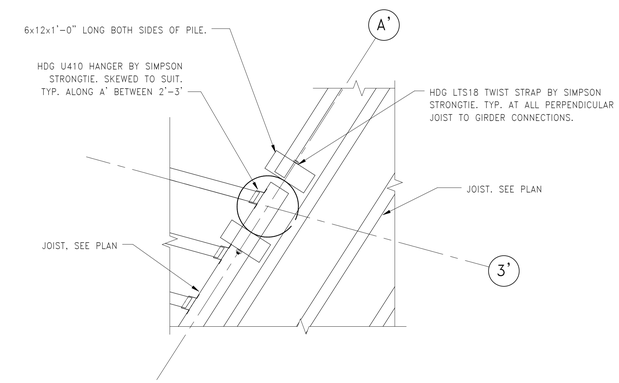


NOTES:
1. DECK NOT SHOWN FOR CLARITY

6 PLAN DETAIL
3/4" = 1'-0"

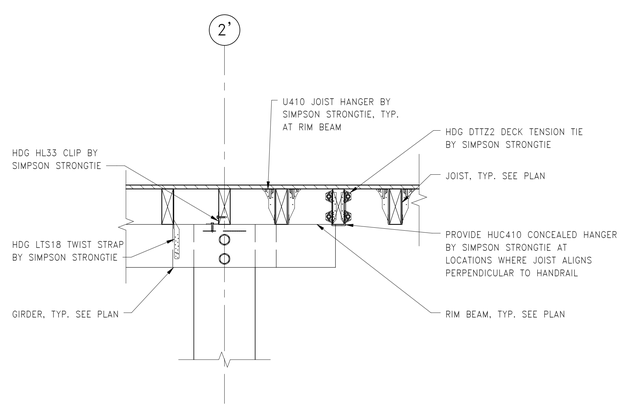


7 SECTION WHERE PERPENDICULAR JOIST ALIGNS WITH HANDRAIL
3/4" = 1'-0"

MPA MARGULIES PERRUZZI ARCHITECTS
308 Congress Street | Boston, MA 02210 | 617.402.3232 | www.mp-architects.com
Design for the way you work.

CLIENT INFORMATION
AS CLOCK TOWER OWNER, LLC c/o SARACEN PROPERTIES
MILL & MAIN RENOVATION PHASE 1
146 MAIN STREET
MAYNARD, MA 01751

CONSULTANT INFORMATION

MEP ENGINEERS
AHA CONSULTING ENGINEERS
21 HAYNES AVE, 2ND FLOOR
LEXINGTON, MA 02421
781-372-3000

HARDWARE CONSULTANT
CAMPBELL-MCCABE, INC.
1 CLOCK TOWER PLACE
MAYNARD, MA 01754
781-899-8822

STRUCTURAL ENGINEER
SIMPSON GUMPERTZ & HEGER
41 SEYON STREET, BLDG 1, SUITE 500
WALTHAM, MA 02453
781-907-0083

SPECIFICATIONS
KALIN ASSOCIATES
1721 WASHINGTON ST., #2
WEST NEWTON, MA 02465
617-964-5477

LIGHTING CONSULTANTS
SLADEN FEINSTEIN INTEG.
295 HUNTINGTON AVE., #305
BOSTON, MA 02115
617-267-9500

CIVIL ENGINEER
NITSCH ENGINEERING
2 CENTRAL PARK, SUITE 400
BOSTON, MA 02108
617-542-8352

LANDSCAPE DESIGN
BROWN, RICHARDSON, & ROWE
3 POST OFFICE SQUARE, 3RD FLOOR
BOSTON, MA 02109
617-542-8552

GEOTECHNICAL CONSULTANT
HALEY & ALDRICH, INC.
465 MEDFORD STREET, SUITE 2200
BOSTON, MA 02129
617-886-7397

REVISIONS

| NUMBER | DESCRIPTION | DATE |
|---|---|---|

STAMP

KEY PLAN

DATE.....10/19/2015
SCALE.....3/4" = 1'-0"
DRAWN BY.....MAT
PROJECT NUMBER.....SAR15A.00

DRAWING TITLE
BOARDWALK AND PIER DETAILS

3S-601
DRAWING NUMBER

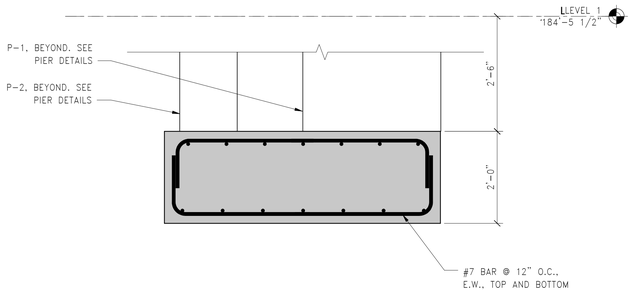


NOTES:
1. SOG NOT SHOWN. SEE DETAIL 6 ON S-010 FOR SOG AT PIERS.

## 1 FOOTING DETAIL
3/4" = 1'-0"

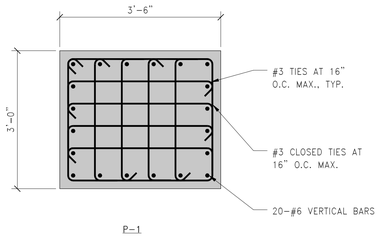


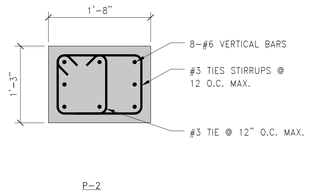


NOTES:
1. PROVIDE STANDARD HOOKS INTO FOOTING BELOW

## 2 PIER DETAILS
3/4" = 1'-0"

MPA MARGULIES PERRUZZI ARCHITECTS
308 Congress Street | Boston, MA 02210 | 617.402.3232 | www.mp-architects.com
Design for the way you work.

CLIENT INFORMATION
AS CLOCK TOWER OWNER, LLC c/o SARACEN PROPERTIES

MILL & MAIN RENOVATION PHASE 1
146 MAIN STREET
MAYNARD, MA 01751

CONSULTANT INFORMATION

MEP ENGINEERS
AHA CONSULTING ENGINEERS
24 HARTWELL AVE, 3RD FLOOR
LEXINGTON, MA 02421
781-372-3000

HARDWARE CONSULTANT
CAMPBELL-MCCABE, INC.
1 CLOCK TOWER PLACE
MAYNARD, MA 01754
781-899-8822

STRUCTURAL ENGINEER
SIMPSON GUMPERTZ & HEGER
41 SEYON STREET, BLDG 1, SUITE 500
WALTHAM, MA 02453
781-907-9200

CIVIL ENGINEER
NITSCH ENGINEERING
2 CENTRAL AVE, SUITE 400
BOSTON, MA 02108
617-542-8352

LANDSCAPE DESIGN
BROWN, RICHARDSON, & ROWE
3 POST OFFICE SQUARE, 3RD FLOOR
BOSTON, MA 02109
617-542-8552

GEOTECHNICAL CONSULTANT
HALEY & ALDRICH, INC.
465 MEDFORD STREET, SUITE 2200
BOSTON, MA 02129
617-886-7397

SPECIFICATIONS
KALIN ASSOCIATES
1721 WASHINGTON ST. #2
WEST NEWTON, MA 02465
617-964-5477

LIGHTING CONSULTANTS
SLADEN FEINSTEIN INTEG.
295 HUNTINGTON AVE., #305
BOSTON, MA 02115
617-267-9500

REVISIONS

| NUMBER | DESCRIPTION | DATE |
|---|---|---|

STAMP

KEY PLAN

DATE.....10/19/2015
SCALE.....As indicated
DRAWN BY.....MAT
PROJECT NUMBER.....SAR15A.00

DRAWING TITLE
ENTRY DETAILS

**3S-602**
DRAWING NUMBER

SLAB NOTE SOG-1
5" MIN. NORMAL WEIGHT CONCRETE SLAB-ON-GRADE REINFORCED WITH #4@15" OC EACH DIRECTION. PLACE ON 15 MIL VAPOR BARRIER OVER 6" CRUSHED STONE SUBBASE ON COMPACTED SUBGRADE. SAW CUT CONTROL JOINTS AT 8'-0" OC MAX. SPACING

PLAN NOTES:

PN1. SEE PLAN FOR TOP OF CONCRETE ELEVATION.

PN2. [X'-X"] INDICATES BOTTOM OF FOOTING ELEVATION.

PN3. P# ON PLAN INDICATES PIER AND PILASTER TYPE. SEE S200 FOR TYPE DETAILS.

PN4. SAW-CUT CONTROL JOINTS IN SLAB-ON-GRADE AT ALL COLUMN CENTERLINES AND AT MID-BAYS. RE-ENTRANT CORNERS ARE PROHIBITED.

PN5. GEOTECHNICAL ENGINEER MUST APPROVE ALL FOOTING BASES PRIOR TO CONCRETE PLACEMENT.

PN6. CONSULT ENGINEER OF RECORD (EOR) IF FIELD CONDITIONS REQUIRE ELEVATION CHANGES IN EXCESS OF 1'-0".

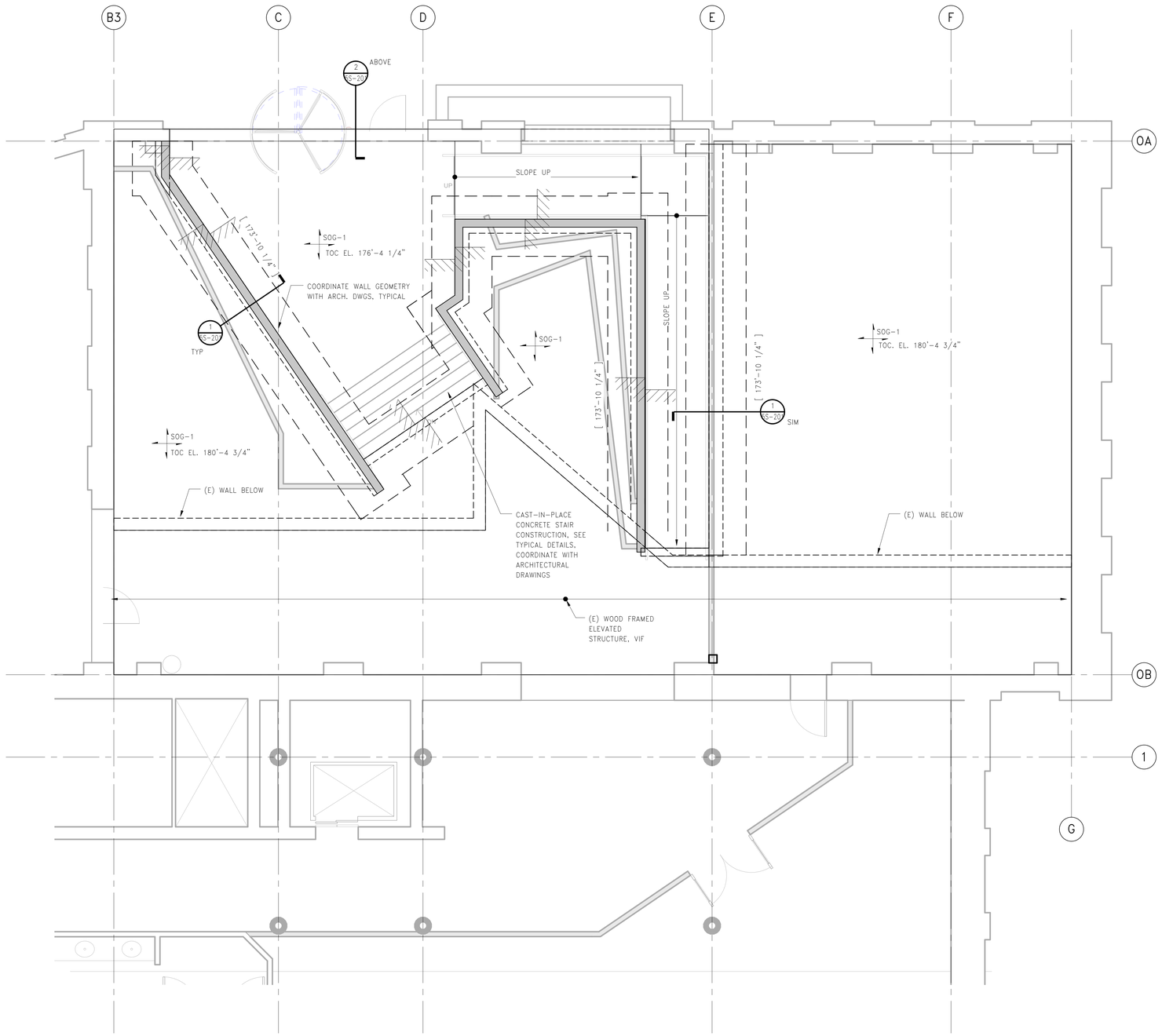


LEVEL 1 NORTH LOBBY FRAMING PLAN
1/4" = 1'-0"

MPA MARGULIES PERRUZZI ARCHITECTS
308 Congress Street | Boston, MA 02210 | 617.482.3232 | www.mp-architects.com
Design for the way you work.

CLIENT INFORMATION
AS CLOCK TOWER OWNER, LLC c/o SARACEN PROPERTIES
MILL & MAIN RENOVATION PHASE 1
146 MAIN STREET
MAYNARD, MA 01751

CONSULTANT INFORMATION

MEP ENGINEERS
AHA CONSULTING ENGINEERS
24 HARTWELL AVE., 3RD FLOOR
LEXINGTON, MA 02421
781-372-3200

HARDWARE CONSULTANT
CAMPBELL-MCCABE, INC.
1 CLOCK TOWER PLACE
MAYNARD, MA 01754
781-899-8822

STRUCTURAL ENGINEER
SIMPSON GUMPERTZ & HEGER
41 SEYON STREET, BLDG 1, SUITE 500
WALTHAM, MA 02453
781-907-9000

CIVIL ENGINEER
NITSCH ENGINEERING
2 CENTER PLAZA, SUITE 430
BOSTON, MA 02108
617-338-0063

LANDSCAPE DESIGN
BROWN, RICHARDSON, & ROWE
3 POST OFFICE SQUARE, 3RD FLOOR
BOSTON, MA 02109
617-542-8552

GEOTECHNICAL CONSULTANT
HALEY & ALDRICH, INC.
465 MEDFORD STREET, SUITE 2200
BOSTON, MA 02129
617-886-7399

SPECIFICATIONS
KALIN ASSOCIATES
1121 WASHINGTON ST., #2
BOSTON, MA 02465
617-964-5477

LIGHTING CONSULTANT
SLADEN FEINSTEIN INTEG.
295 HUNTINGTON AVE., #305
BOSTON, MA
617-267-9500

REVISIONS

| NUMBER | DESCRIPTION | DATE |
|---|---|---|

STAMP

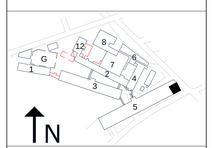


KEY PLAN

DATE.....10/19/15
SCALE.....1/4" = 1'-0"
DRAWN BY.....MSS
PROJECT NUMBER.....SAR15A.00

DRAWING TITLE
LEVEL 1 - NORTH LOBBY FRAMING PLAN

5S-101
DRAWING NUMBER

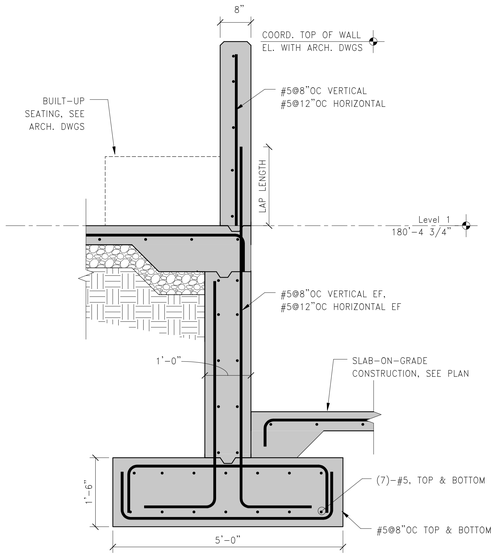


1 SECTION
3/4" = 1'-0"

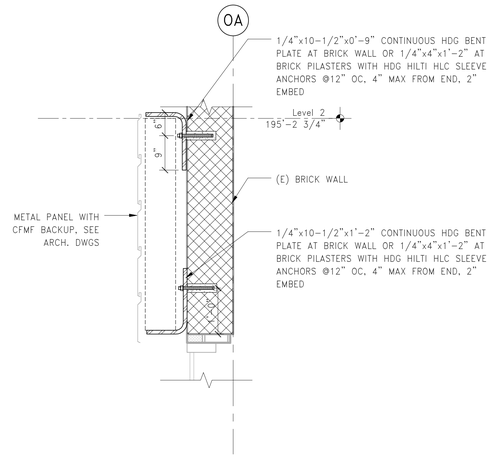


2 SECTION
3/4" = 1'-0"

MPA MARGULIES PERRUZZI ARCHITECTS
308 Congress Street | Boston, MA 02210 | 617.482.3232 | www.mp-architects.com
Design for the way you work.

CLIENT INFORMATION
AS CLOCK TOWER OWNER, LLC c/o SARACEN PROPERTIES

MILL & MAIN RENOVATION PHASE 1
146 MAIN STREET
MAYNARD, MA 01751

CONSULTANT INFORMATION

MEP ENGINEERS
AHA CONSULTING ENGINEERS
7A LAWRENCE AVE, 2ND FLOOR
LEXINGTON, MA 02421
781-372-3200

HARDWARE CONSULTANT
CAMPBELL-MCCABE, INC.
1 CLOCK TOWER PLACE
MAYNARD, MA 01754
781-899-8822

STRUCTURAL ENGINEER
SIMPSON GUMPERTZ & HEGER
41 SEYON STREET, BLDG 1, SUITE 500
WALTHAM, MA 02453
781-907-9000

CIVIL ENGINEER
NITSCH ENGINEERING
2 CENTRAL SQ, SUITE 400
BOSTON, MA 02108
617-338-0063

LANDSCAPE DESIGN
BROWN, RICHARDSON, & ROWE
3 POST OFFICE SQUARE, 3RD FLOOR
BOSTON, MA 02109
617-542-8652

GEOTECHNICAL CONSULTANT
HALEY & ALDRICH, INC.
465 MEDFORD STREET, SUITE 2200
BOSTON, MA 02129
617-886-7399

SPECIFICATIONS
KALIN ASSOCIATES
1151 WASHINGTON ST., #2
BOSTON, MA 02465
617-964-5477

LIGHTING CONSULTANT
SLADEN FEINSTEIN INTEG.
286 HUNTINGTON AVE., #305
BOSTON, MA
617-787-9500

REVISIONS

| NUMBER | DESCRIPTION | DATE |
|---|---|---|

STAMP

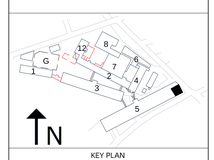


KEY PLAN

DATE.....10/19/15
SCALE..... 3/4" = 1'-0"
DRAWN BY.....MSS
PROJECT NUMBER.....SAR15A.00

DRAWING TITLE
NORTH LOBBY SECTIONS & DETAILS

**5S-201**
DRAWING NUMBER

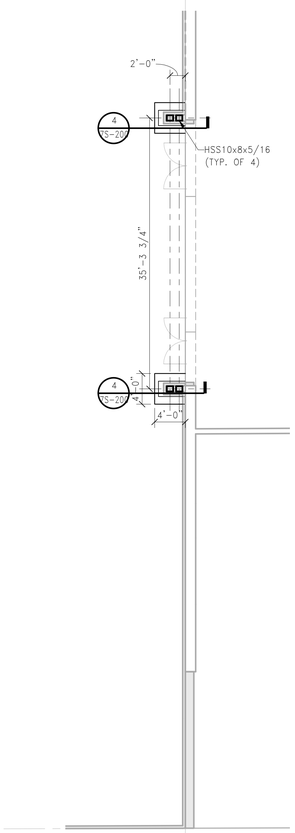


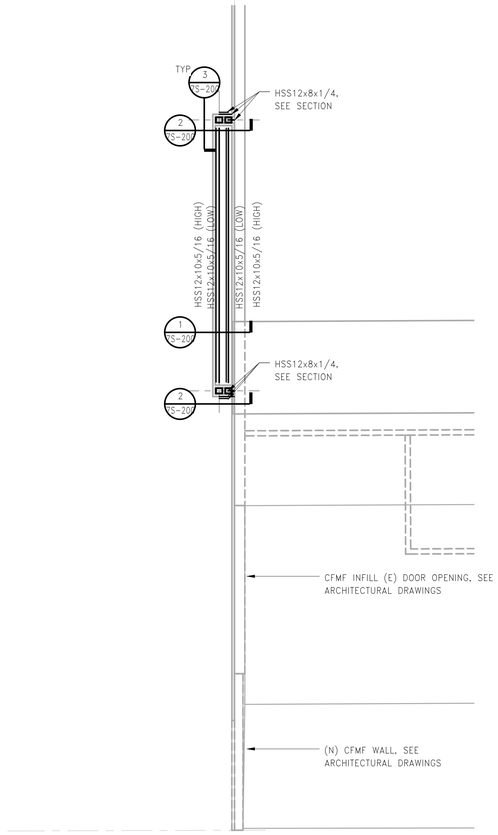


NOTES:
1. HOT-DIP GALVANIZE ALL STEEL, CONNECTORS, AND ANCHOR RODS.
2. PLUG WELD OR FILL WITH METALLIC PUTTY ALL VENT AND DRAIN HOLES.
3. SEAL WELD ALL SEAMS NOT OTHERWISE WELDED.

## LEVEL 1 FRAMING PLAN

1/8" = 1'-0"

## ROOF FRAMING PLAN

1/8" = 1'-0"

MPA MARGULIES PERRUZZI ARCHITECTS
308 Congress Street | Boston, MA 02210 | 617.482.3232 | www.mp-architects.com
Design for the way you work.

CLIENT INFORMATION
AS CLOCK TOWER OWNER, LLC c/o SARACEN PROPERTIES
MILL & MAIN RENOVATION PHASE 1
146 MAIN STREET
MAYNARD, MA 01751

CONSULTANT INFORMATION

MEP ENGINEERS
AHA CONSULTING ENGINEERS
24 HARTWELL AVE, 3RD FLOOR
LEXINGTON, MA 02421
781-372-3200

HARDWARE CONSULTANT
CAMPBELL-MCCABE, INC.
1 CLOCK TOWER PLACE
MAYNARD, MA 01754
781-899-8822

STRUCTURAL ENGINEER
SIMPSON GUMPERTZ & HEGER
41 SEYON STREET, BLDG 1, SUITE 500
WALTHAM, MA 02453
781-907-9000

CIVIL ENGINEER
NITSCH ENGINEERING
2 CENTER PLAZA, SUITE 430
BOSTON, MA 02108
617-338-0063

LANDSCAPE DESIGN
BROWN, RICHARDSON, & ROWE
3 POST OFFICE SQUARE, 3RD FLOOR
BOSTON, MA 02109
617-542-8552

GEOTECHNICAL CONSULTANT
HALEY & ALDRICH, INC.
465 MEDFORD STREET, SUITE 2200
BOSTON, MA 02129
617-886-7399

SPECIFICATIONS
KALIN ASSOCIATES
1121 WASHINGTON STREET, #2
WEST NEWTON, MA 02465
617-964-5477

LIGHTING CONSULTANTS
SLADEN FEINSTEIN INTEG.
295 HUNTINGTON AVE., #305
BOSTON, MA 02115
617-267-9500

REVISIONS

| NUMBER | DESCRIPTION | DATE |
|---|---|---|

STAMP

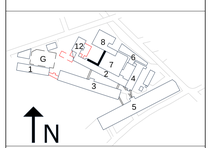


KEY PLAN

DATE.....10/19/15
SCALE..... 1/8" = 1'-0"
DRAWN BY.....MSS
PROJECT NUMBER.....SAR15A.00

DRAWING TITLE
FRAMING PLANS

7S-100
DRAWING NUMBER

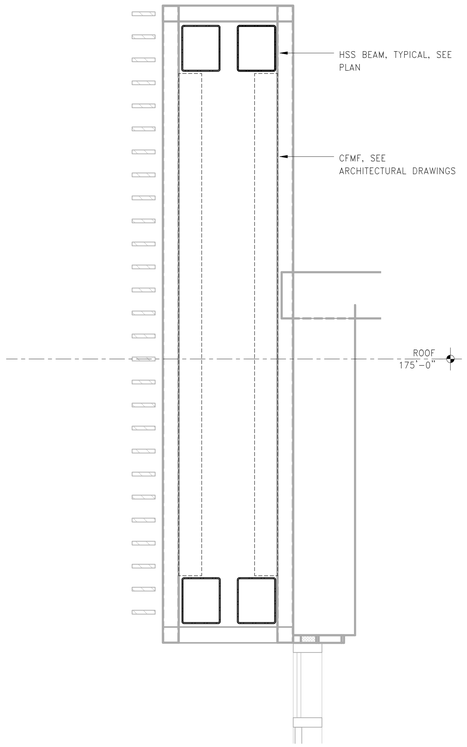


1 SECTION
3/4" = 1'-0"

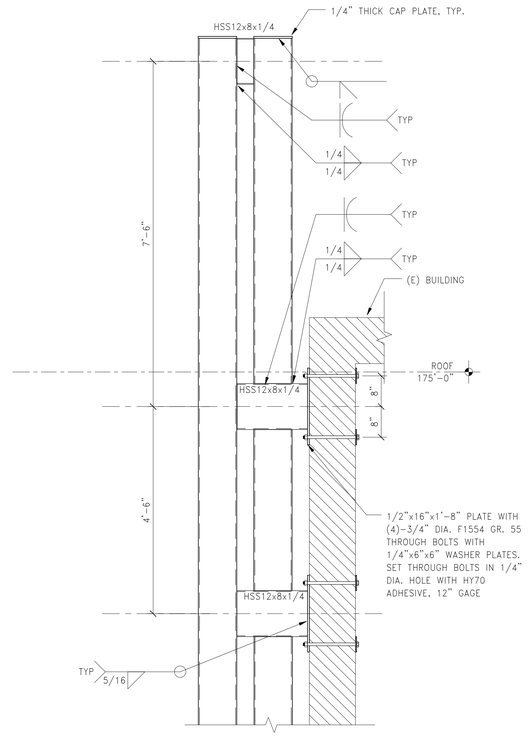


2 SECTION
3/4" = 1'-0"

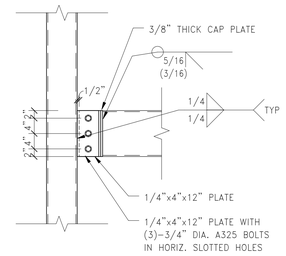


3 SECTION
3/4" = 1'-0"

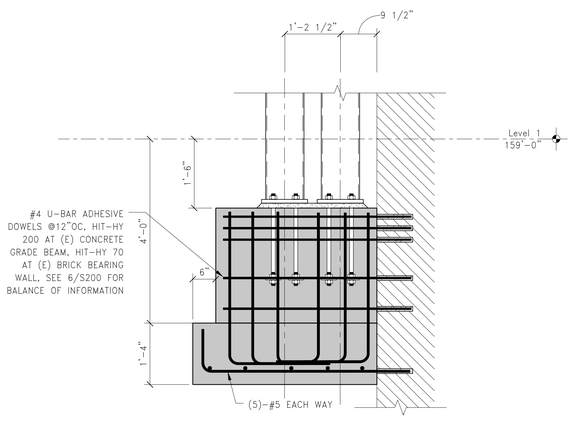


4 SECTION
3/4" = 1'-0"

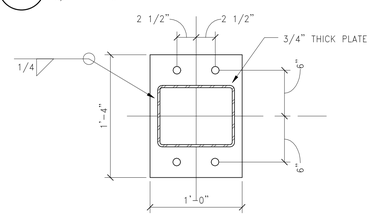


5 BASE PLATE TYPE BP1
1 1/2" = 1'-0"

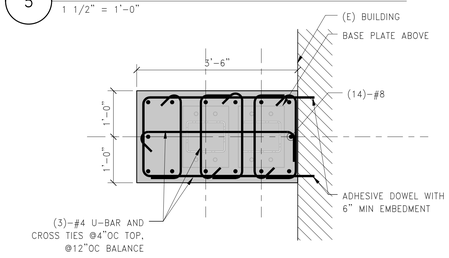


6 PILASTER PLAN DETAIL
3/4" = 1'-0"

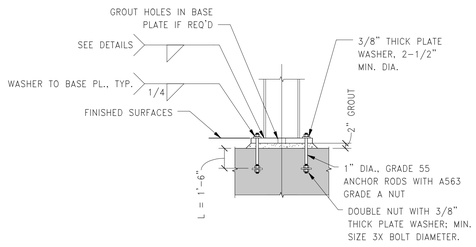


BASE PLATE NOTES:

1. ALL BASE PLATES ARE CENTERED ON GRID LINES UON.
2. PROVIDE LEVELING NUTS AND SHIM PLATES AS REQUIRED TO MAINTAIN COLUMN LEVELNESS.
3. MATCH SURFACE PREPARATION AND FINISH OF BEARING PLATE, ANCHOR RODS, WASHERS, AND PLATE WASHERS TO THAT OF COLUMNS.
4. WASHER PLATES SHALL BE A36.
5. BOLT LOCATIONS VARY. SEE BASE PLATE DETAILS FOR LOCATIONS.
6. SET ANCHOR RODS WITH TEMPLATE.

7 BASE PLATE DETAIL
1/2" = 1'-0"

MPA MARGULIES PERRUZZI ARCHITECTS
308 Congress Street | Boston, MA 02210 | 617.482.3232 | www.mp-architects.com
Design for the way you work.

CLIENT INFORMATION
AS CLOCK TOWER OWNER, LLC c/o SARACEN PROPERTIES
MILL & MAIN RENOVATION PHASE 1
146 MAIN STREET
MAYNARD, MA 01751

CONSULTANT INFORMATION

MEP ENGINEERS
AHA CONSULTING ENGINEERS
24 MUDDY RIVER, 3RD FLOOR
LEXINGTON, MA 02421
781-372-3200

HARDWARE CONSULTANT
CAMPBELL-MCCABE, INC.
1 CLOCK TOWER PLACE
MAYNARD, MA 01754
781-899-8822

STRUCTURAL ENGINEER
SIMPSON, GUMPERTZ & HEGER
41 SEYON STREET, BLDG 1, SUITE 500
WALTHAM, MA 02453
781-907-9000

CIVIL ENGINEER
NITSCH ENGINEERING
2 CONSTITUTION PLAZA, SUITE 650
BOSTON, MA 02108
617-338-0063

LANDSCAPE DESIGN
BROWN, RICHARDSON, & ROWE
3 POST OFFICE SQUARE, 3RD FLOOR
BOSTON, MA 02109
617-542-8502

GEOTECHNICAL CONSULTANT
HALEY & ALDRICH, INC.
465 MEDFORD STREET, SUITE 2200
BOSTON, MA 02129
617-886-7399

SPECIFICATIONS
KALIN ASSOCIATES
1121 WASHINGTON STREET #2
WEST NEWTON, MA 02465
617-964-5477

LIGHTING CONSULTANTS
SLADEN FEINSTEIN INTEG.
295 HUNTINGTON AVE., #305
BOSTON, MA 02115
617-787-9500

REVISIONS

| NUMBER | DESCRIPTION | DATE |
|---|---|---|

STAMP

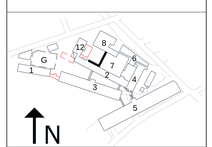


KEY PLAN

DATE.....10/19/15
SCALE.....As indicated
DRAWN BY.....Author
PROJECT NUMBER.....SAR15A.00

DRAWING TITLE
SECTIONS & DETAILS

7S-200
DRAWING NUMBER