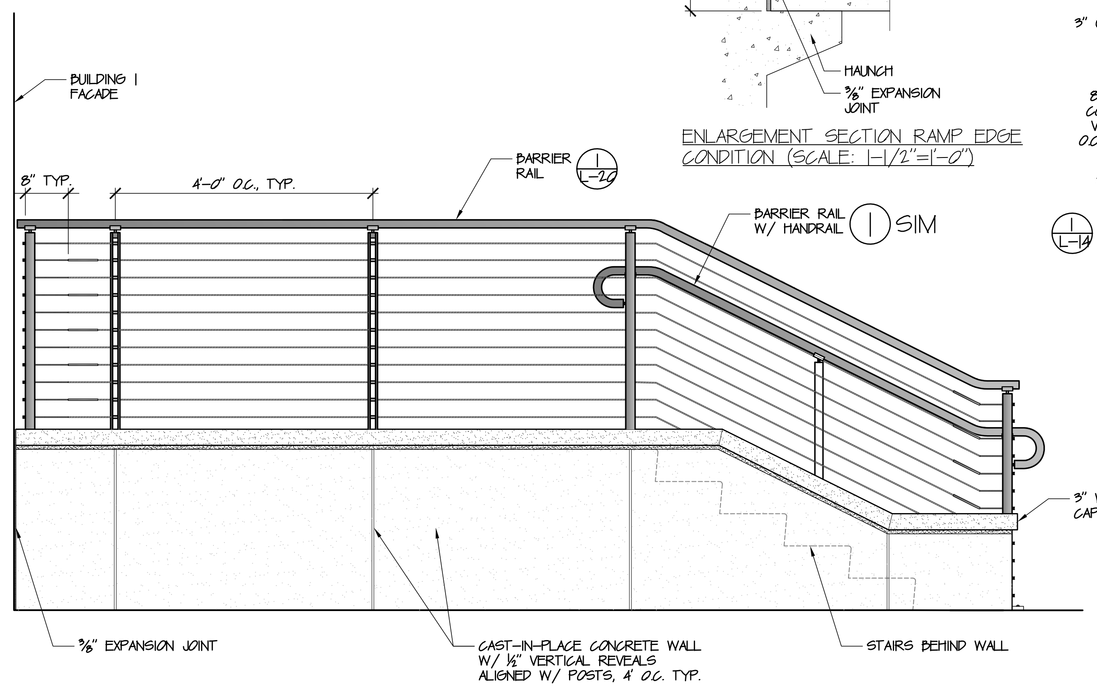

ELEVATION

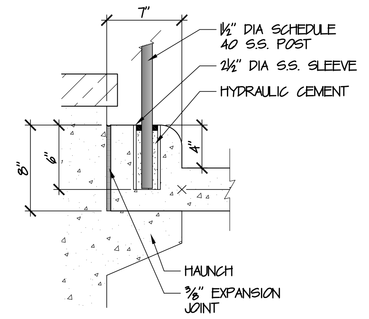

ENLARGEMENT SECTION RAMP EDGE CONDITION (SCALE: 1-1/2"=1'-0")

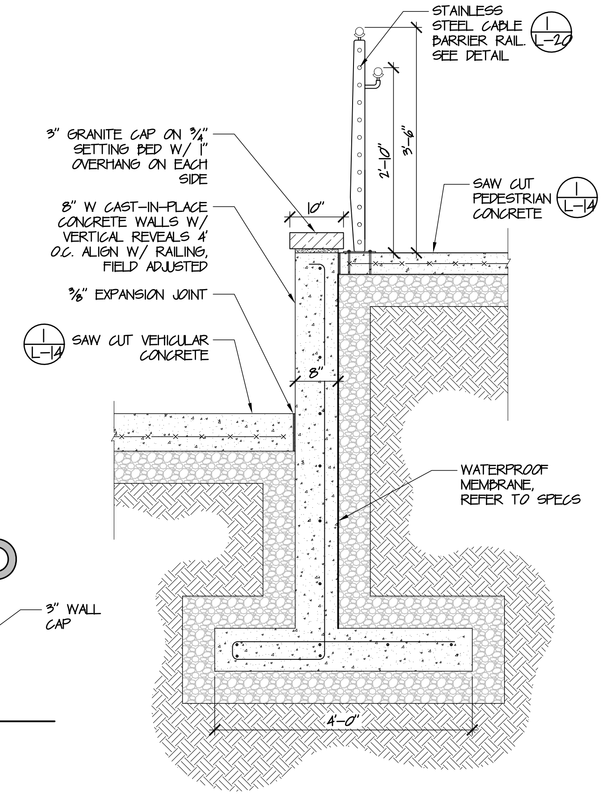

SECTION AA (AT TOP OF STAIRS)

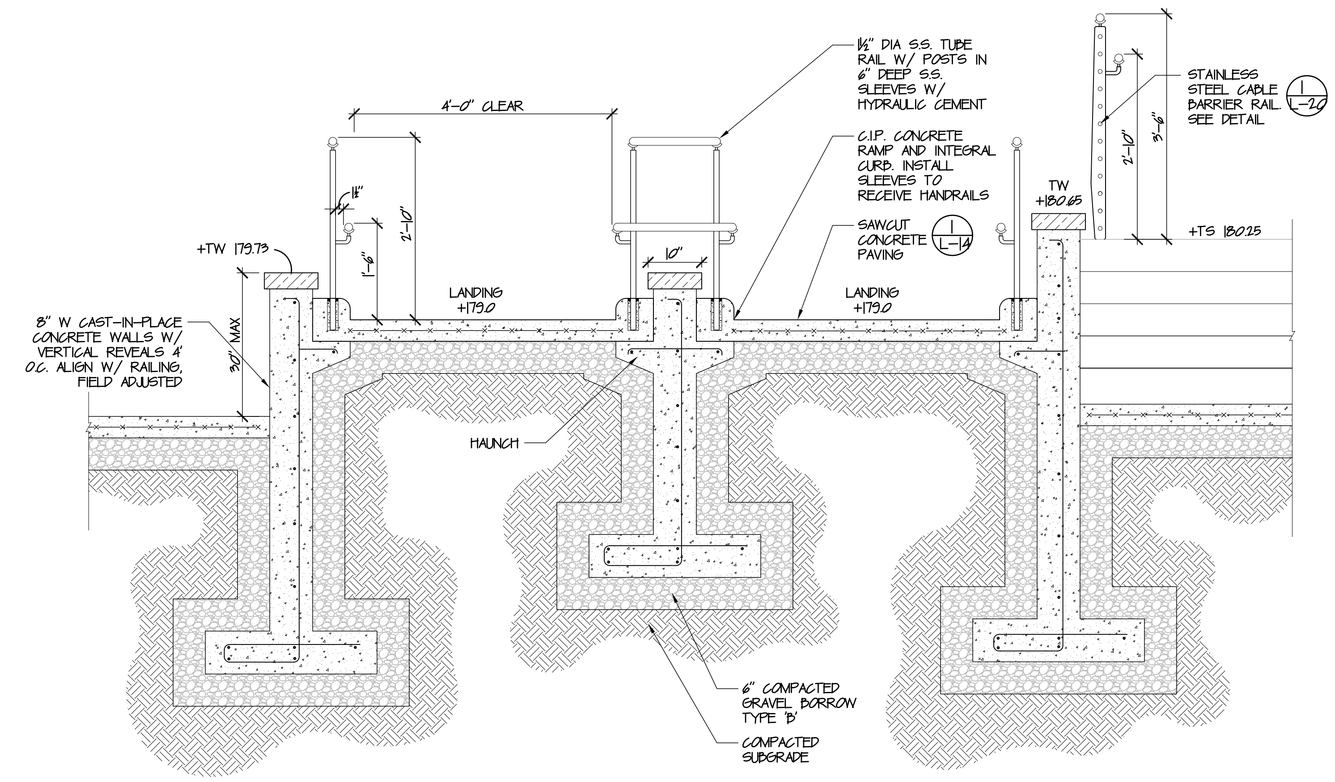

SECTION BB (AT ACCESSIBLE RAMP)

NOTES:

1. FOOTINGS AND REINFORCING SHALL BE REVIEWED BY STRUCTURAL ENGINEER AND IN SHOP DRAWINGS BEFORE CONSTRUCTION.

1 C.I.P. RETAINING WALL (AT ACCESSIBLE RAMP)

SCALE: 3/4"=1'-0"

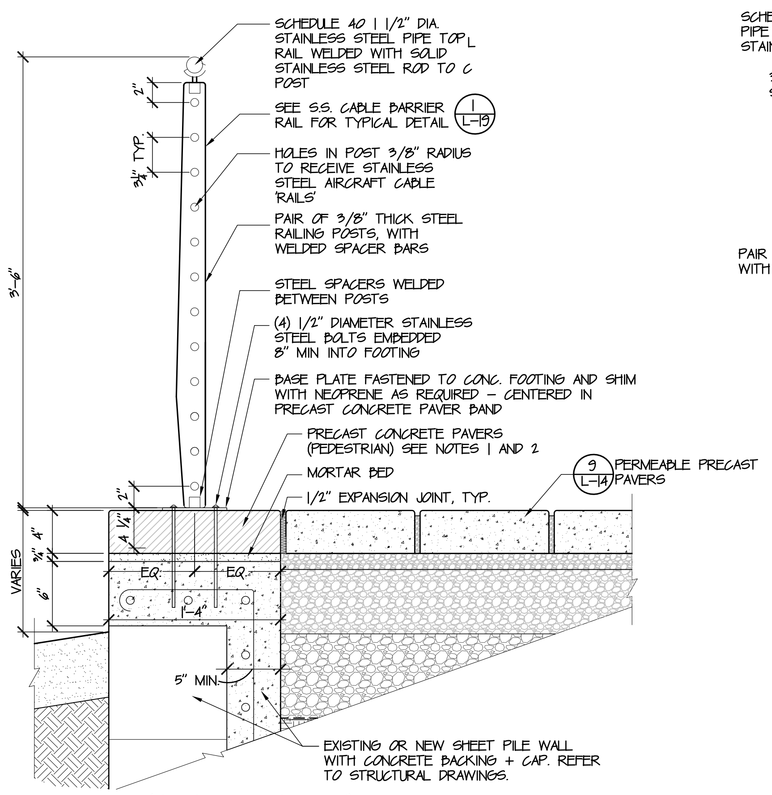

BARRIER RAIL (TEMPORARY PHASE 1)

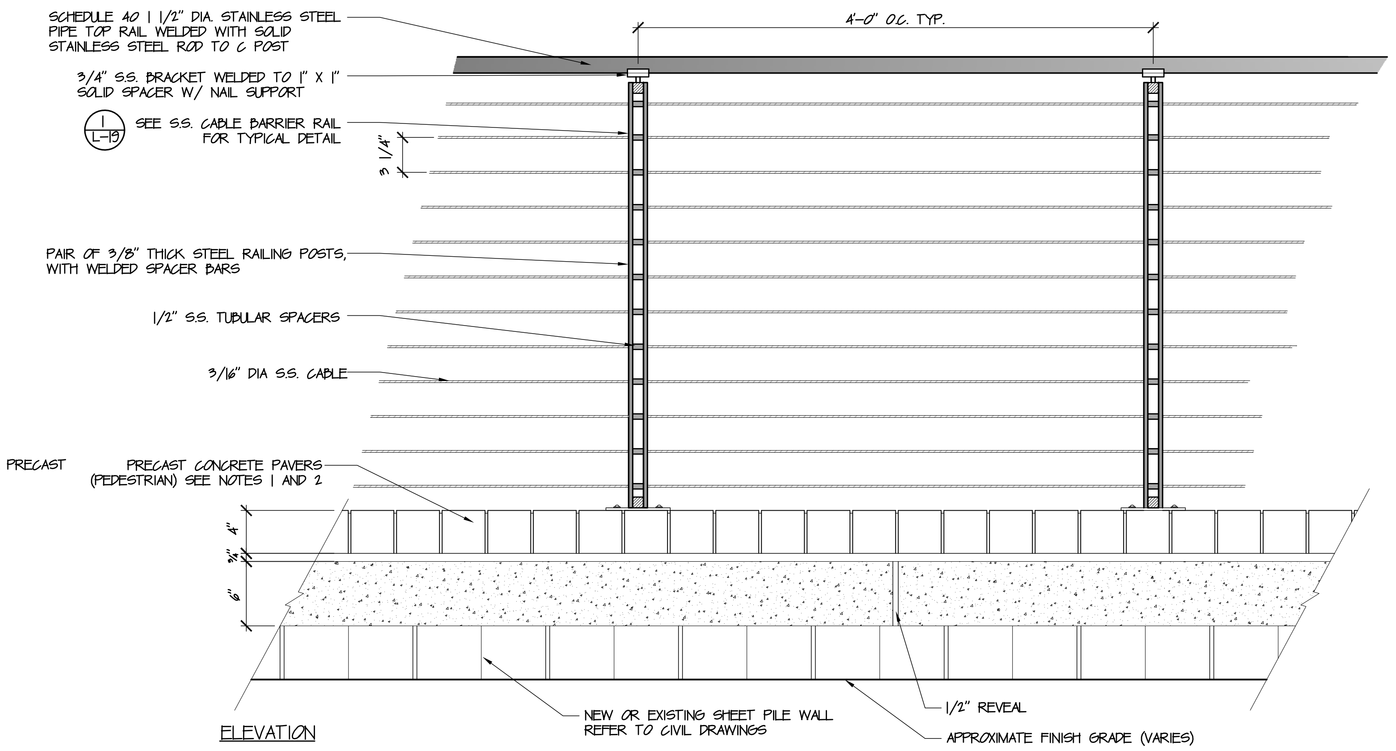

ELEVATION

NOTES:

1. PAVERS TO BE UNILOCK 4"x4"x16" PROMENADE PAVERS IN UMBRIANO FINISH AS MANUFACTURED BY UNILOCK BOSTON 95 COMMERCE DR. UXBRIDGE, MA 01569
2. COLOR TO BE: SELECTED FROM MANUFACTURER'S STANDARD COLOR RANGE. SUBMIT SAMPLE COLORS FOR APPROVAL TO LANDSCAPE ARCHITECT.
3. RAILING SHOWN IS TEMPORARY AT BUILDING 5. IT SHALL BE RELOCATED AND REUSED IN PHASE 1 AS SHOWN ON SHEET L-2 AND L-3.

2 PRECAST CONCRETE PAVER BAND ON C.I.P. WALL

SCALE: 1-1/2"=1'-0"

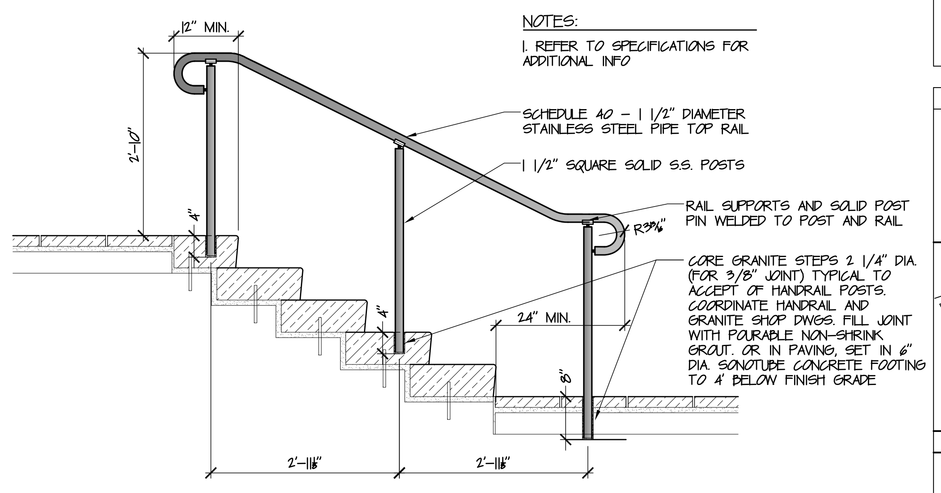

NOTES:

1. REFER TO SPECIFICATIONS FOR ADDITIONAL INFO

3 STAINLESS STEEL HANDRAIL AT STAIRS

SCALE: 3/4"=1'-0"

MIP MARGULIES PERRUZZI ARCHITECTS
308 Congress Street | Boston, MA 02210 | 617.482.3232 | www.mp-architects.com
Design for the way you work.

CLIENT INFORMATION
MILL & MAIN RENOVATION
BLDG 12 & 5S LOBBY
AS CLOCK TOWER OWNER LLC
146 MAIN STREET
MAYNARD, MA 01754

CONSULTANT INFORMATION

MEP ENGINEERS
AHA CONSULTING ENGINEERS
34 MAPPLEWOOD AVE.
LEXINGTON, MA 02421
781-373-3000

HARDWARE CONSULTANT
CAMPBELL-MCCABE, INC.
1 CLOCK TOWER PLACE
MAYNARD, MA 01754
781-897-8822

STRUCTURAL ENGINEER
SIMPSON GUMPERTZ & HEGER
41 SEYON STREET, BLDG 1, SUITE 500
WALTHAM, MA 02453
781-907-0900

CIVIL ENGINEER
NITSCH ENGINEERING
2 CENTRAL WHARF, SUITE 400
BOSTON, MA 02108
617-338-0063

LANDSCAPE DESIGN
BROWN, RICHARDSON, & ROWE
3 POST OFFICE SQUARE, 3RD FLOOR
BOSTON, MA 02109
617-542-8552

GEOTECHNICAL CONSULTANT
HALEY & ALDRICH, INC.
465 MEDFORD STREET, SUITE 2200
BOSTON, MA 02129
617-886-7399

SPECIFICATIONS
KAUN ASSOCIATES
1121 WASHINGTON ST., # 2
WEST NEWTON, MA 02465
(617) 964-5477

LIGHTING CONSULTANT
SLADEN FEINSTEIN INTEG.
295 HUNTINGTON AVE., #305
BOSTON, MA 02115
617-267-9500

REVISIONS

NUMBER	DESCRIPTION	DATE

STAMP

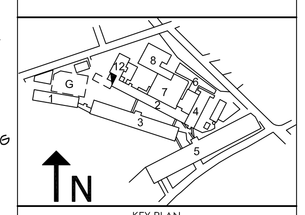

KEY PLAN

DATE.....10/19/2015
SCALE.....As indicated
DRAWN BY.....JL
PROJECT NUMBER.....SAR15A.00

DRAWING TITLE
DETAIL SHEET - WALLS
3 OF 3

L-18
DRAWING NUMBER