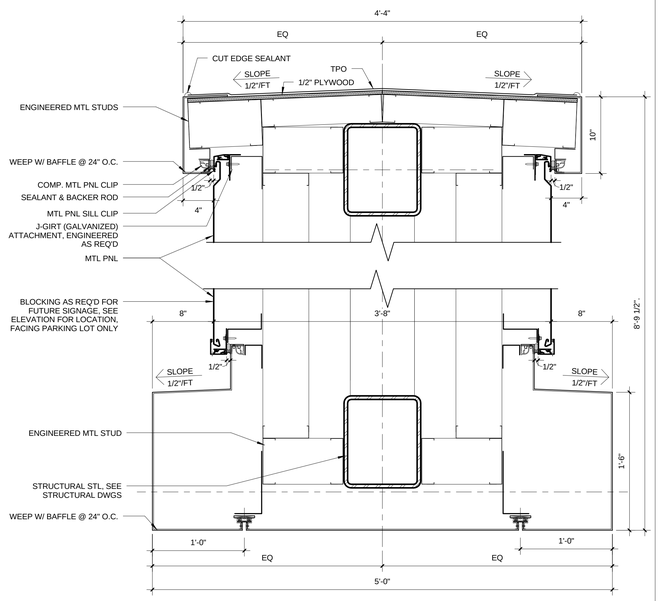


6 PORTAL DTL
SCALE: 1 1/2" = 1'-0"

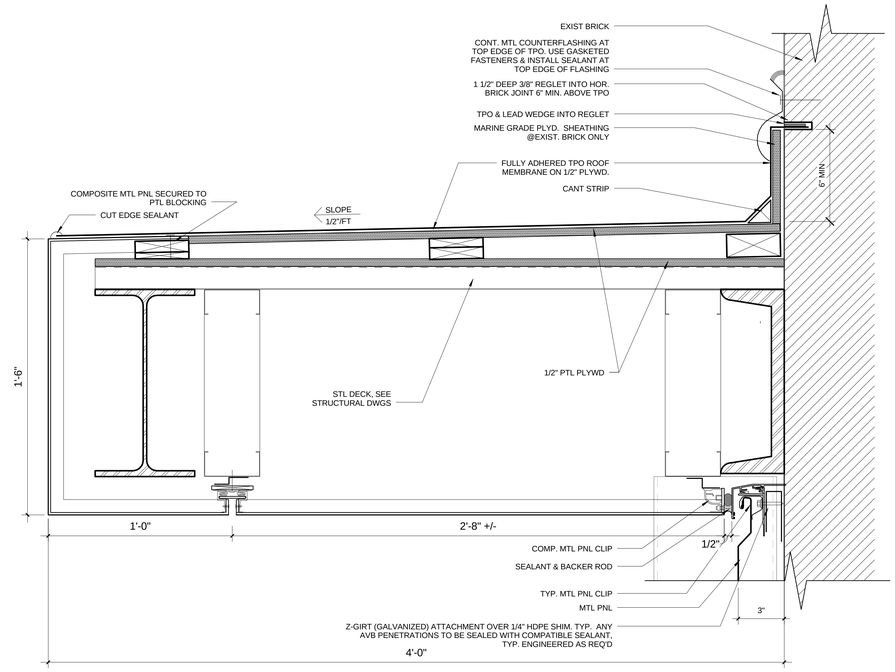


3 MTL PNL @ CANOPY
SCALE: 3" = 1'-0"

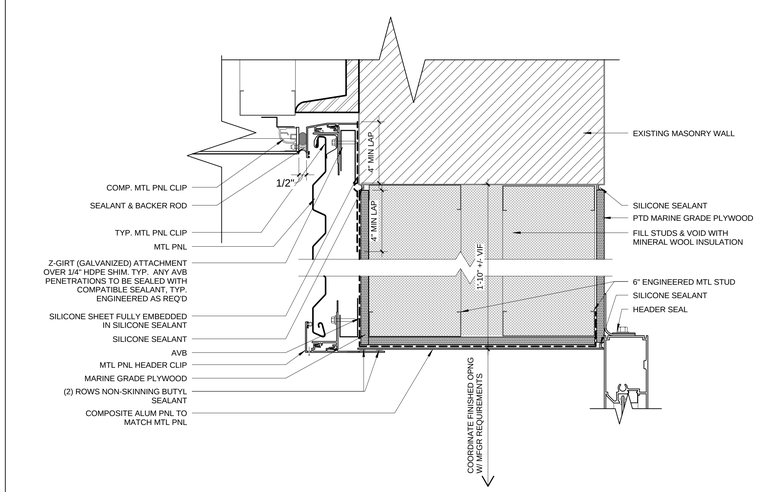


5 LOADING DOCK @ HEAD
SCALE: 3" = 1'-0"

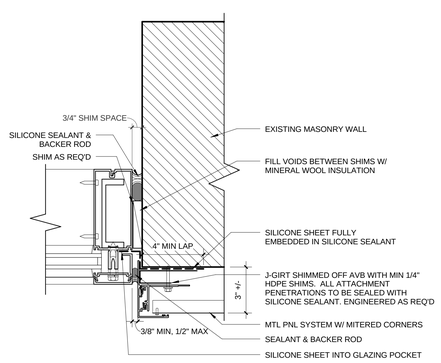


2 WINDOW @ JAMB
SCALE: 3" = 1'-0"

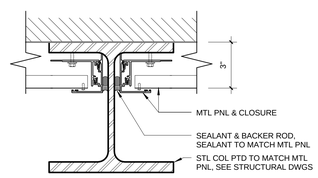


7 MTL PNL @ STL COL
SCALE: 3" = 1'-0"

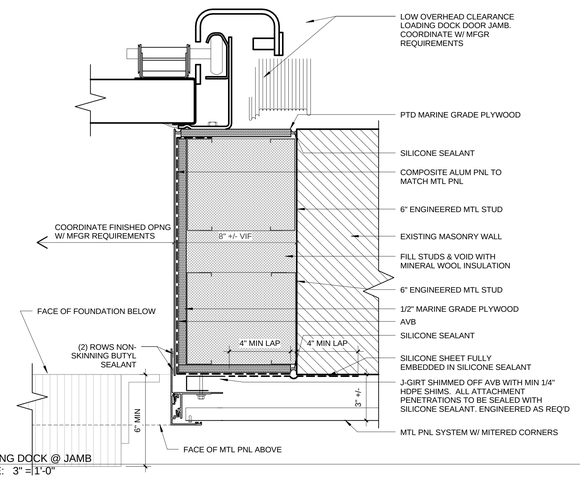


4 LOADING DOCK @ JAMB
SCALE: 3" =1'-0"

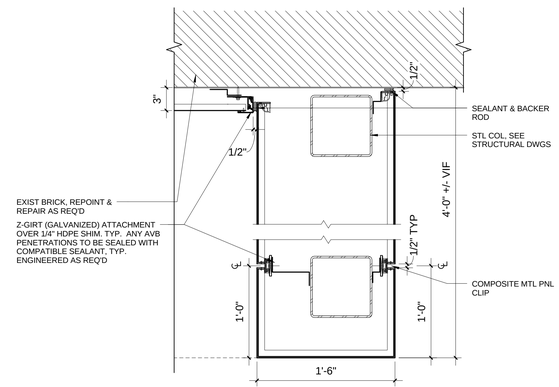


1 MTL PNL @ CANOPY WALL
SCALE: 1 1/2" = 1'-0"


MPA MARGULIES PERRUZZI ARCHITECTS
308 Congress Street | Boston, MA 02210 | 617.402.3232 | www.mp-architects.com
Design for the way you work.


CLIENT INFORMATION
MILL & MAIN RENOVATION PHASE 1
AS CLOCKTOWER OWNER LLC
146 MAIN STREET
MAYNARD, MA 01754

CONSULTANT INFORMATION

MEP ENGINEERS
AHA CONSULTING ENGINEERS
2 MILL & MAIN PLACE, SUITE 500
LEXINGTON, MA 02421
781-372-3000

HARDWARE CONSULTANT
CAMPBELL-MCCABE, INC.
1 CLOCK TOWER PLACE
MAYNARD, MA 01754
781-899-9822

STRUCTURAL ENGINEER
SIMPSON GUMPERTZ & HEGER
41 SEYON STREET, BLDG 1, SUITE 500
WALTHAM, MA 02453
781-907-9200

CIVIL ENGINEER
NITSCH ENGINEERING
2 CENTRAL WHARF, SUITE 4SE
BOSTON, MA
617-338-0063

LANDSCAPE DESIGN
BROWN, RICHARDSON, & ROWE
3 POST OFFICE SQUARE, 3RD FLOOR
BOSTON, MA
617-542-8152

GEOTECHNICAL CONSULTANT
HALEY & ALDRICH, INC.
465 MEDFORD STREET, SUITE 2200
BOSTON, MA
617-886-7300

LIGHTING CONSULTANT
SLADEN FEINSTEIN INTEG.
205 HUNTINGTON AVE., # 305
BOSTON, MA 02115
617-267-9500

SPECIFICATIONS
KALIN ASSOCIATES
1121 WASHINGTON ST., #2
WEST NEWTON, MA. 02465
617-964-5477

| REVISIONS | | |
|---|---|---|
| NUMBER | DESCRIPTION | DATE |

STAMP

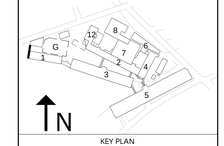


KEY PLAN

DATE.....10/19/15
SCALE.....As indicated
DRAWN BY.....SA
PROJECT NUMBER.....SAR15A.00

DRAWING TITLE
EXTERIOR SECTION DETAILS

1A-540
DRAWING NUMBER